**Instruction**

MI 020-542
March 2016

# I/A Series® Pressure S Series Transmitters
# ATEX/IECEx Safety Information

Foxboro®

by Schneider Electric

# Contents

# Transmitter Identification

A typical data plate is shown in Figure 1. Review the model code on the data plate attached to your transmitter to determine its electrical, pressure, and hazardous location ratings.

*Figure 1. Sample Transmitter Identification*

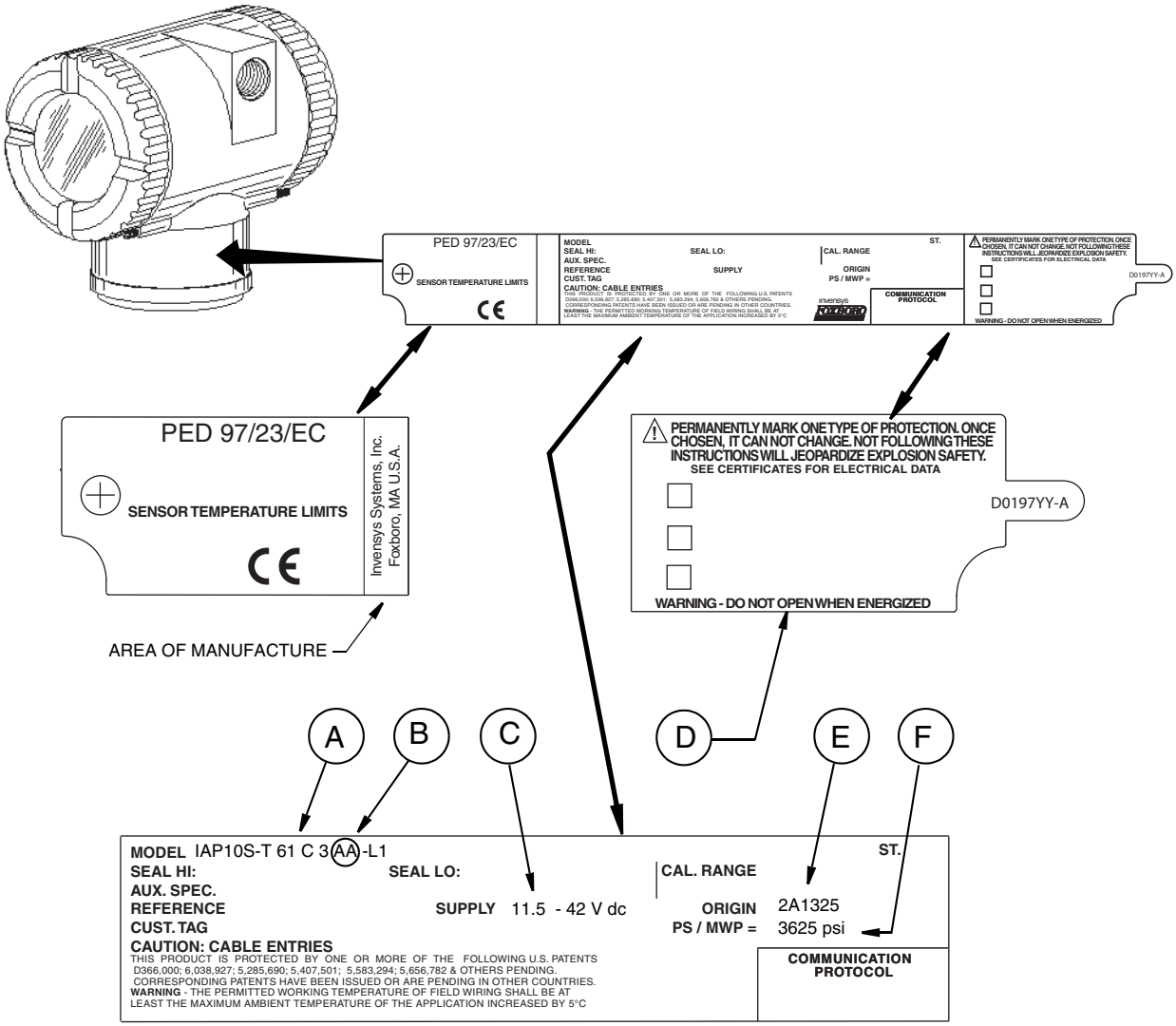


| Letter | Description | Reference |
|---|---|---|
| A | Model Code | See PSS 2A-1C13 P. |
| B | Electrical Safety Design Code | See “Electrical Certification Rating” on page 6. |
| C | Supply Voltage | See “Supply Voltage” on page 6. |
| D | Data Plate | See “Electrical Certification Rating” on page 6. |
| E | Origin Code | See “Origin Code” on page 17. |
| F | Pressure Rating | See “Pressure Rating” on page 13. |

# Supply Voltage

The proper supply voltage is printed on the data plate. See Item C on the example shown in Figure 1. Ensure that the proper electrical source is connected to the transmitter.

# Electrical Certification Rating

The electrical safety design code is printed on the data plate as part of the model code. See Items A, B, and D in Figure 1.

Table 1 describes the ATEX electrical specifications, and Table 2 describes the IECEx electrical safety specifications. The type of protection is also marked on the data plate (Item D in Figure 1).

**NOTE**

These transmitters have been designed to meet the electrical safety descriptions listed in Table 1 and Table 2. For detailed information or status of testing laboratory approvals/certifications, contact Invensys.

*Table 1. ATEX Electrical Safety Specifications*

| Testing Laboratory, Types of Protection, and Area Classification | Models | Electronic Version | Application Conditions | Electrical Safety Design Code |
|---|---|---|---|---|
| **ATEX** intrinsically safe; Ex ia IIC, Zone 0 | IAP10S, IGP10S | T | Temperature Class T4, T85°C, Ta = -40 to +80°C. See certificate SIRA 13ATEX2012X for electrical data. | AA |
| **ATEX** flameproof; Ex d IIC, Zone 1 | IAP10S, IGP10S | T | Temperature Class T6, T85°C, Ta = -40 to +75°C. See certificate SIRA 13ATEX1013X for electrical data. | AD |
| **ATEX** protection n and ic; Ex nL IIC, Zone 2 | IAP10S, IGP10S | T | Temperature Class T4, T85°C, Ta = -40 to +80°C. See certificate SIRA 13ATEX4014X for electrical data. | AN |
| **ATEX** multiple certifications, ia and n. Refer to codes AA and AN for details. | IAP10S, IGP10S | T | See note (a) | AM |
| **ATEX** multiple certifications, ia, d, and n. Refer to codes AA, AD, and AN for details. | IAP10S, IGP10S | T | See note[(a)] | AP |

a. User must permanently mark (check the rectangular block on the data plate) one type of protection only (ia, d, or n). This mark cannot be changed once it is applied. See Item D on the example shown in Figure 1.

*Table 2. IECEx Electrical Safety Specifications*

| Testing Laboratory, Types of Protection, and Area Classification | Models | Electronic Version | Application Conditions | Electrical Safety Design Code |
|---|---|---|---|---|
| **IECEx** intrinsically safe; Ex ia IIC | IAP10S, IGP10S | T | Temperature Class T4, T85°C, Ta = -40 to +80°C. See certificate IECEx SIR 13.0031X for electrical data. | EA |
| **IECEx** flameproof; Ex d IIC | IAP10S, IGP10S | T | Temperature Class T6, T85°C, Ta = -40 to +75°C. See certificate IECEx SIR 13.0033X for electrical data. | ED |
| **IECEx** protection n; Ex ic IIC or Ex nA | IAP10S, IGP10S | T | Temperature Class T4, T85°C, Ta = -40 to +80°C. See certificate IECEx SIR 13.0032X for electrical data. | EN |
| **IECEx** multiple certifications, ia and n. Refer to codes EA and EN for details. | IAP10S, IGP10S | T | See note (a) | EM |
| **IECEx** multiple certifications, ia, d, and n. Refer to codes EA, ED, and EN for details. | IAP10S, IGP10S | T | See note[(a)] | EP |

a. User must permanently mark (check the rectangular block on the data plate) one type of protection only (ia, d, or n). This mark cannot be changed once it is applied. See Item D on the example shown in Figure 1.

# Entity Parameters

## For Electrical Safety Design Codes AA and EA

The entity parameters for the supply and output circuit (terminals + and -) in the type of explosion protection intrinsic safety Ex ia IIC, only for connection to a certified intrinsically safe circuit with the following maximum values are:

$U_i$ = 30 V
$I_i$ = 110 mA
$P_i$ = 800 mW

# Warnings

## General Warnings

**⚠ WARNING**

1. Transmitters must be installed to meet all applicable local installation regulations, such as hazardous location requirements, electrical wiring codes, and mechanical piping codes. Persons involved in the installation must be trained in these code requirements to ensure that the installation takes maximum advantage of the safety features designed into the transmitter.
2. A plug is supplied with each transmitter with 1/2 NPT conduit connection. It is intended to provide moisture ingress protection of the unused housing conduit entry. The plug must be wrench tight to achieve this level of protection. Thread sealant is required. Explosion-proof applications may require a certified plug. Housings with M20 threaded conduit connections are provided with an ATEX certified plug. Thread sealant is required to provide moisture ingress protection.
3. To install a transmitter labeled with multiple approvals, select and permanently mark the certification label in the tick block to distinguish the installed approval type from the unused approval types. Once installed, the transmitter **cannot** be reinstalled using any other approval type. Not following these instructions will jeopardize explosion safety.

**⚠ WARNING**

1. When used in a dust zone with flammable dusts, fibers, and flyings in groups IIIA, IIIB or IIIC, the layer auto-ignition temperature shall be at least 75°C above the maximum surface temperature marked in the dust coding.
2. The equipment is only certified for use in ambient temperatures marked on the equipment and should not be used outside this range.
3. The maximum process pressure indicated on the marking must not be exceeded.
4. Installation shall be carried out in accordance with the applicable code of practice (typically IEC 60079-14) by suitably trained personnel.
5. There are no special checking or maintenance conditions. All explosion-protected equipment should be periodically inspected in accordance with the applicable code of practice (typically IEC 60079-17). The interval between inspections should not normally exceed 3 years, unless justification for a longer interval is given.
6. With regard to explosion safety, it is not necessary to check for correct operation.
7. The equipment contains no user-replaceable parts and is not intended to be repaired by the user. Repair of the equipment is to be carried out by the manufacturer, or their approved agents, in accordance with the applicable code of practice.

# Intrinsically Safe Warnings

**⚠ WARNING**

1. Where necessary, intrinsically safe equipment may be connected and disconnected while the circuits are energized.
2. The certificate numbers have an 'X' suffix which indicates that special conditions of installation and use apply. Those installing or inspecting this equipment must have access to the contents of the certificate or these instructions. The conditions listed in the certificate are reproduced below:
   i. Some models have the main electronics enclosure manufactured from aluminum alloy. In rare cases, ignition sources due to impact and friction sparks could occur. This shall be considered during installation, particularly if the equipment is installed in a zone 0 location.
   ii. When installed in flammable dust zones, under certain extreme circumstances an incendive electrostatic charge may build up on the painted surfaces, which are non-conducting. Therefore, the user/installer shall implement precautions to prevent the build up of electrostatic charge, for example, to place the equipment in a location where a charge-generating mechanism (such as wind-blown dust) is unlikely to be present and clean with a damp cloth.
   iii. When installed in a flammable dust zone, the installer shall ensure that the cable entry maintains the dust-tightness (IP6X) of the enclosure.

# Type n Warnings

**⚠ WARNING**

1. The equipment is marked "Do not open when energized". However, if the equipment is powered from an intrinsically safe supply (that is, installed under "Ex ic" protection), then live working is permitted and the enclosure can be opened without first isolating the supply.
2. The certificate numbers have an 'X' suffix which indicates that a special condition of installation and use applies. Those installing or inspecting this equipment must have access to the contents of the certificate or these instructions. The condition listed in the certificate is reproduced below:
   i. The temperature of the branching point of the cable entry is 3°C above the ambient temperature. The temperature rating of the cable shall be considered if the equipment is installed in a high ambient temperature.
3. On transmitters certified for ATEX or IECEx protection n, the threaded housing covers must be installed.

# Explosionproof/Flameproof and Enclosure Warning

**⚠ WARNING**

1. To prevent possible explosion and to maintain explosionproof/flameproof and dust-ignitionproof protection, plug unused openings with a certified metal pipe plug. For 1/2 NPT connections, both the plug and conduit must be engaged a minimum of five full threads. For M20 connections, the certified plug provided and the conduit must be engaged a minimum of seven full threads.
2. The threaded housing covers must be installed. Turn covers to seat O-ring into the housing and then continue to hand tighten until the cover contacts the housing metal-to-metal.
3. If the electronics housing is removed for any reason, it must be hand tightened fully. Then engage the set screw until it bottoms out and **back it off 1/8th turn**. Fill the set screw recess with red lacquer (Foxboro Part number X0180GS or equivalent). The housing then may be rotated up to one full turn in a counterclockwise direction for optimum access to adjustments.

# Pressure Warnings

**⚠ WARNING**

When installing your transmitter, tighten process connector bolts to a torque of 61 N•m (45 ft•lb) and drain plugs and optional vent screws to 20 N•m (15 ft•lb). See Figure 2.

*Figure 2. Pressure Connections*

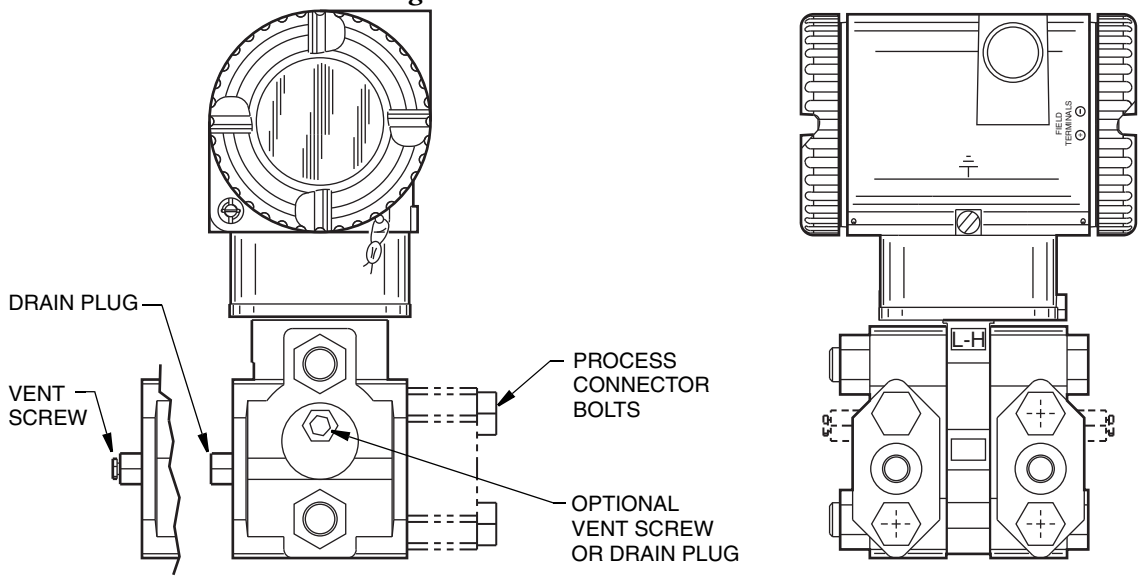

**⚠ WARNING**

If a sensor is replaced or process covers are rotated for venting, replace the gaskets and torque the cover bolts (see Figure 3 and 4) to 100 N•m (75 ft•lb) in several even increments. Torque values are 66 N•m (50 ft•lb) when optional 316 ss bolts are specified (option B1). A pressure test is required. Perform a hydrostatic test with a liquid following proper hydrostatic test procedures. Pressure test the process cover assembly by applying a hydrostatic pressure of 150% of the maximum static and overrange pressure rating to both sides of the process cover/sensor assembly simultaneously through the process connections. Hold pressure for one minute. There should be no leakage of the test fluid through the gaskets.

*Figure 3. Sensor Replacement*

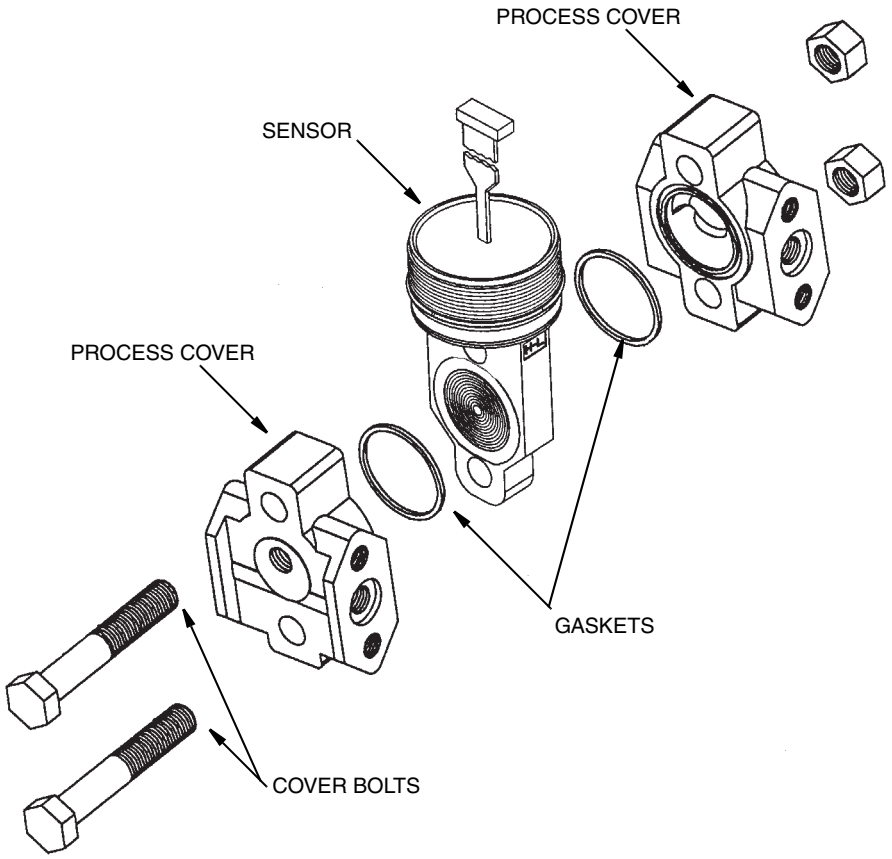

*Figure 4. Sensor Replacement (PVDF Inserts)*

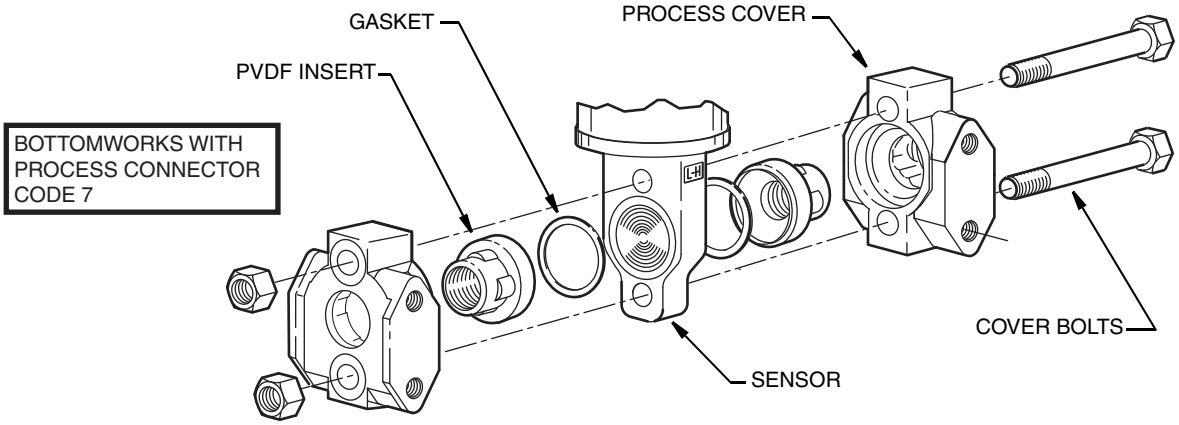


## Process Fluid Warning

**⚠ WARNING**

If process containing parts are to be disassembled:

1. Make sure that process fluid is not under pressure or at high temperature.
2. Take proper precautions concerning leakage or spillage of any toxic or otherwise dangerous fluid. Follow any Material Safety Data Sheet (MSDS) recommendations.

## Seal Fill Fluid Warning

**⚠ WARNING**

Even though the volume of seal fluid is small, be sure that the fill fluid can mix safely with the process fluid.

## Parts Replacement Warning

**⚠ WARNING**

This product contains components that have critical safety characteristics. Do **not** substitute components. Replace components only with identical factory supplied components. Component substitution may impair the electrical safety of this equipment and its suitability for use in hazardous locations.

# PED Certification

Invensys offers the PED (Harmonized Pressure Equipment Directive for the European Community) certification only with transmitters ordered with ATEX Electrical Safety Design Code selections. Transmitters with PED certification have a CE marking on the data plate that also carries the PED number 0575.

# Pressure Rating

The maximum working pressure (PS or MWP) for the transmitter is printed on the data plate. See Item F on the example shown in Figure 1.

The data plate of flanged level transmitters and transmitters with flanged pressure seals are stamped with the MWP **if the transmitter pressure range is the limiting factor**. It is stamped "Flange Rate" **if the flange rating is the limiting factor**. The MWP of the flanged seal is stamped on the seal data plate. See Figure 5.

*Figure 5. Sample Seal Data Plate*

MODEL CODE: FSFPS-A2S0E313B MWP: 275 psig at 100°F
NOTICE: BREAKING CONNECTIONS VOIDS WARRANTY
BE SURE FILL FLUID CAN MIX SAFELY WITH PROCESS HIGH SIDE SEAL
HIGH SIDE FLUID, DC200, 10 cSt SILICONE TEMP RANGE -40 TO +450°F
PROCESS WETTED MATERIAL 316 SS

When using transmitters with threaded, in-line saddle weld, or sanitary pressure seals, compare the MWP of the transmitter on the transmitter data plate and the MWP of the seals on the seals data plates and **use the lesser value as the system MWP**.

The MWP on the seal data plates may not be given at your process temperature. Use the following information and industry standards as required to determine the actual pressure limits for your application.

# Pressure Seal PSFLT

*Table 3. Pressure Seal PSFLT Pressure Limits*

| ANSI Carbon Steel and 316L SS Flanges (a) | | | | | | |
|---|---|---|---|---|---|---|
| Process Temperature (b) | Maximum Working Pressure: Carbon Steel (c) | | | Maximum Working Pressure: 316L SS (d) | | |
| | Class 150 | Class 300 | Class 600 | Class 150 | Class 300 | Class 600 |
| -20 to 100°F | 285 psig | 740 psig | 1480 psig | 275 psig | 720 psig | 1440 psig |
| 200°F | 260 psig | 680 psig | 1360 psig | 235 psig | 620 psig | 1240 psig |
| 300°F | 230 psig | 655 psig | 1310 psig | 215 psig | 560 psig | 1120 psig |
| 400°F | 200 psig | 635 psig | 1265 psig | 195 psig | 515 psig | 1025 psig |
| DIN Carbon Steel and 316 SS Flanges (e) | | | | | | |
| Process Temperature (b) | Maximum Working Pressure: Carbon Steel (c) | | | Maximum Working Pressure: 316L SS (d) | | |
| | PN 10/40 | PN 10/16 | PN 25/40 | PN 10/40 | PN 10/16 | PN 25/40 |
| -10 to +100°C | 40 bar | 16 bar | 40 bar | 40 bar | 16 bar | 40 bar |
| 150°C | 37.5 bar | 14.5 bar | 37.5 bar | 36.3 bar | 14.5 bar | 36.3 bar |
| 200°C | 35 bar | 13 bar | 35 bar | 33.7 bar | 13.4 bar | 33.7 bar |
| 250°C | 32 bar | 11 bar | 32 bar | 31.8 bar | 12.7 bar | 31.8 bar |

a. ANSI flanges per ASME/ANSI B16.5 - 2003.
b. Flange temperature/pressure ratings only; seal temperature ratings may be lower. Refer to Table 10.
c. ASME/ANSI Material Group 1.1; Linear Interpolation acceptable.
d. ASME/ANSI Material Group 2.2; Linear Interpolation acceptable.
e. DIN flanges per EN 1092-1.

# Pressure Seals PSFPS and PSFES

*Table 4. Pressure Seal PSFPS and PSFES Pressure Limits*

| ANSI Carbon Steel and 316L SS Flanges (a) | | | | | | |
|---|---|---|---|---|---|---|
| Process Temperature (b) | Maximum Working Pressure: Carbon Steel (c) | | | Maximum Working Pressure: 316L SS (d) | | |
| | Class 150 | Class 300 | Class 600 | Class 150 | Class 300 | Class 600 |
| -20 to 100°F | 285 psig | 740 psig | 1480 psig | 275 psig | 720 psig | 1440 psig |
| 200°F | 260 psig | 680 psig | 1360 psig | 235 psig | 620 psig | 1240 psig |
| 300°F | 230 psig | 655 psig | 1310 psig | 215 psig | 560 psig | 1120 psig |
| 400°F | 200 psig | 635 psig | 1265 psig | 195 psig | 515 psig | 1025 psig |
| 500°F | 170 psig | 605 psig | 1205 psig | 170 psig | 480 psig | 955 psig |
| 600°F | 140 psig | 570 psig | 1135 psig | 140 psig | 450 psig | 900 psig |
| DIN Carbon Steel and 316L SS Flanges (e) | | | | | | |
| Process Temperature (b) | Maximum Working Pressure: Carbon Steel (c) | | | Maximum Working Pressure: 316L SS (d) | | |
| | PN 10/40 | PN 10/16 | PN 25/40 | PN 10/40 | PN 10/16 | PN 25/40 |
| -10 to +100°C | 40 bar | 16 bar | 40 bar | 40 bar | 16 bar | 40 bar |
| 150°C | 37.5 bar | 14.5 bar | 37.5 bar | 36.3 bar | 14.5 bar | 36.3 bar |
| 200°C | 35 bar | 13 bar | 35 bar | 33.7 bar | 13.4 bar | 33.7 bar |
| 250°C | 32 bar | 11 bar | 32 bar | 31.8 bar | 12.7 bar | 31.8 bar |
| 300°C | 30 bar | 9 bar | 30 bar | 29.7 bar | 11.8 bar | 29.7 bar |
| 350°C | 27.8 bar | 7.5 bar | 27.8 bar | 28.5 bar | 11.4 bar | 28.5 bar |

a. ANSI flanges per ASME/ANSI B16.5 - 2003.
b. Flange temperature/pressure ratings only; seal temperature ratings may be lower. Refer to Table 10.
c. ASME/ANSI Material Group 1.1; Linear Interpolation acceptable.
d. ASME/ANSI Material Group 2.2; Linear Interpolation acceptable.
e. DIN flanges per EN 1092-1.

# Pressure Seals PSFFR and PSFFD

*Table 5. Pressure Seal PSFFR and PSFFD Pressure Limits*

| ANSI Carbon Steel and 316L SS Flanges (a) | | | | | | |
|---|---|---|---|---|---|---|
| Process Temperature (b) | Maximum Working Pressure: Carbon Steel (c) | | | Maximum Working Pressure: 316L SS (d) | | |
| | Class 150 | Class 300 | Class 600 | Class 150 | Class 300 | Class 600 |
| -20 to 100°F | 285 psig | 740 psig | 1480 psig | 275 psig | 720 psig | 1440 psig |
| 200°F | 260 psig | 680 psig | 1360 psig | 235 psig | 620 psig | 1240 psig |
| 300°F | 230 psig | 655 psig | 1310 psig | 215 psig | 560 psig | 1120 psig |
| 400°F | 200 psig | 635 psig | 1265 psig | 195 psig | 515 psig | 1025 psig |
| 500°F | 170 psig | 605 psig | 1205 psig | 170 psig | 480 psig | 955 psig |
| 600°F | 140 psig | 570 psig | 1135 psig | 140 psig | 450 psig | 900 psig |
| DIN Carbon Steel and 316 SS Flanges (e) | | | | | | |
| Process Temperature[b] | Maximum Working Pressure: Carbon Steel[c] | | | Maximum Working Pressure: 316L SS[d] | | |
| | PN 10/40 | PN 10/16 | PN 25/40 | PN 10/40 | PN 10/16 | PN 25/40 |
| -10 to +100°C | 40 bar | 16 bar | 40 bar | 40 bar | 16 bar | 40 bar |
| 150°C | 37.5 bar | 14.5 bar | 37.5 bar | 36.3 bar | 14.5 bar | 36.3 bar |
| 200°C | 35 bar | 13 bar | 35 bar | 33.7 bar | 13.4 bar | 33.7 bar |
| 250°C | 32 bar | 11 bar | 32 bar | 31.8 bar | 12.7 bar | 31.8 bar |
| 300°C | 30 bar | 9 bar | 30 bar | 29.7 bar | 11.8 bar | 29.7 bar |
| 350°C | 27.8 bar | 7.5 bar | 27.8 bar | 28.5 bar | 11.4 bar | 28.5 bar |

a. ANSI flanges per ASME/ANSI B16.5 - 2003.

b. Flange temperature/pressure ratings only; seal temperature ratings may be lower depending on mounting and fill fluid. Refer to Table 10.

c. ASME/ANSI Material Group 1.1; Linear Interpolation acceptable.

d. ASME/ANSI Material Group 2.2; Linear Interpolation acceptable.

e. DIN flanges per EN 1092-1.

# Pressure Seals PSFAR and PSFAD

*Table 6. Pressure Seal PSFAR and PSFAD Pressure Limits*

| ANSI Carbon Steel and 316L SS Flanges (a) | | | | | | | | |
|---|---|---|---|---|---|---|---|---|
| Process Temperature (b) | Maximum Working Pressure (c): Carbon Steel (d) | | | | Maximum Working Pressure (c): 316L SS (e) | | | |
| | Class 150 | Class 300 | Class 600 | Class 1500 | Class 150 | Class 300 | Class 600 | Class 1500 |
| -20 to 100°F | 285 psig | 740 psig | 1480 psig | 3705 psig | 275 psig | 720 psig | 1440 psig | 3600 psig |
| 200°F | 260 psig | 680 psig | 1360 psig | 3395 psig | 235 psig | 620 psig | 1240 psig | 3095 psig |
| 300°F | 230 psig | 655 psig | 1310 psig | 3270 psig | 215 psig | 560 psig | 1120 psig | 2795 psig |
| 400°F | 200 psig | 635 psig | 1265 psig | 3170 psig | 195 psig | 515 psig | 1025 psig | 2570 psig |
| 500°F | 170 psig | 605 psig | 1205 psig | 3015 psig | 170 psig | 480 psig | 955 psig | 2390 psig |
| 600°F | 140 psig | 570 psig | 1135 psig | 2840 psig | 140 psig | 450 psig | 900 psig | 2255 psig |

a. ANSI flanges per ASME/ANSI B16.5 - 2003.
b. Flange temperature/pressure ratings only; seal temperature ratings may be lower. Refer to Table 10.
c. The maximum working pressure with the non-metallic ptfe and PVC lower housing materials is 150 psig (1035 kPa) regardless of the higher allowable flange pressure range.
d. ASME/ANSI Material Group 1.1; Linear Interpolation acceptable.
e. ASME/ANSI Material Group 2.2; Linear Interpolation acceptable.

# Pressure Seals PSTAR and PSTAD

*Table 7. Pressure Seals PSTAR and PSTAD Pressure Limits (a)*

| Process Temperature | Stainless Steel Bolts (Bolting Code S) | | Carbon Steel and High Strength 300 Series SS Bolts (Bolting Codes C and H) | |
|---|---|---|---|---|
| | Diaphragm Codes 2 and 3 | Diaphragm Code 4 | Diaphragm Codes 2 and 3 | Diaphragm Code 4 |
| -20 to +100°F | 1250 psig | 750 psig | 2500 psig | 1500 psig |
| 200°F | 1075 psig | 645 psig | 2150 psig | 1290 psig |
| 300°F | 975 psig | 585 psig | 1950 psig | 1170 psig |
| 400°F | 900 psig | 540 psig | 1800 psig | 1080 psig |
| 500°F | 835 psig | 500 psig | 1670 psig | 1000 psig |
| 600°F | 760 psig | 460 psig | 1525 psig | 920 psig |

a. Flange temperature/pressure ratings only; seal temperature ratings may be lower depending on mounting and fill fluid. Refer to Table 10.

The pressure rating is dependent on the diaphragm size and the bolting material. The diaphragm size and bolting material are identified in the pressure seal model number which is located on the pressure seal. See following example:

PSTAR-B**3**2USSS1SA**C**14C

BOLTING CODE

DIAPHRAGM SIZE (IN)

## Pressure Seals PSISR and PSISD

The maximum working pressure is equivalent to a nominal 3- or 4-inch Schedule 40 pipe as defined by ASME/ANSI standards.

## Pressure Seals PSSCR and PSSCT

The maximum working pressure of the seal process connection varies with the clamping device used. Refer to Tri-Clover Tri-Clamp standards to determine the pressure limits of the clamping system that you are using.

## PSSSR and PSSST (Sanitary Tank Spud) Seals

The maximum working pressure of mini tank spud seal is 1.55 MPa at 120°C (225 psi at 250°F). That of the standard tank spud seal is 1.38 MPa at 120°C (200 psi at 250°F).

# Origin Code

The origin code identifies the area of manufacture and the year and week of manufacture. See Item E on the example shown in Figure 1. In the example, 2A means the product was manufactured in the Measurement and Instrument Division, 13 identifies the year of manufacture as 2013, and 25, the week of manufacture in that year.

# Operating Temperature Limits

The operating temperature limits of the electronics are -40°C and +85°C (-40°F and +185°F). The limits are -40°C and +75°C (-40°F and +167°F) for IAP10S and IGP10S transmitters with ATEX flameproof certification. Ensure that the transmitter is operated within this range.

The sensor body operating temperature limits are determined by the sensor fill fluid. The cover material, sensor diaphragm material and fill fluid are specified by two characters in the model code on the data plate. See Item A on the example shown in Figure 1. Also see Table 8 to interpret this part of the code and Table 9 to determine the sensor body temperature limits. In the example IAP10S-T**22**C1AA-L1, the number 22 identifies the fill fluid in Table 8 as silicone. Table 9 identifies silicone as having temperature limits of -46 and +121°C (-50 and +250°F).

***Table 8. Interpretation of Model Code for IAP10S and IGP10S Transmitters***

| Code | Process Connector Material | Sensor Diaphragm Material | Fill Fluid |
|---|---|---|---|
| 20 | 316L ss | Co-Ni-Cr | Silicone |
| 21 | 316L ss | Co-Ni-Cr | Fluorinert |
| 22 | 316L ss | 316L ss | Silicone |
| 23 | 316L ss | 316L ss | Fluorinert |
| 30 | 316L ss | Nickel alloy (a) | Silicone |
| 31 | 316L ss | Nickel alloy[(a)] | Fluorinert |
| 32 | Nickel alloy[(a)] | Nickel alloy[(a)] | Silicone |
| 33 | Nickel alloy[(a)] | Nickel alloy[(a)] | Fluorinert |

*Table 8. Interpretation of Model Code for IAP10S and IGP10S Transmitters (Continued)*

| Code | Process Connector Material | Sensor Diaphragm Material | Fill Fluid |
|---|---|---|---|
| D1 | N/A - Transmitter used with pressure seal | | Silicone |
| D2 (b) | | | Fluorinert |
| S3 | | | Silicone |
| S4[b] | | | Fluorinert |
| SC | | | Silicone |
| SD | | | Inert |
| 52 | 316L ss | Co-Ni-Cr | Silicone |
| 53 | 316L ss | Co-Ni-Cr | Fluorinert |
| 60 | 316L ss | 316L ss | Silicone |
| 61 | 316L ss | 316L ss | Fluorinert |
| 62 | 316L ss | Nickel alloy[a] | Silicone |
| 63 | 316L ss | Nickel alloy[a] | Fluorinert |
| D5 | N/A - Flameproof transmitter used with pressure seal | | Silicone |
| D6[b] | | | Fluorinert |
| S5 | | | Silicone |
| S6[b] | | | Fluorinert |
| SH | | | Silicone |
| SJ | | | Inert |

a. Equivalent to Hastelloy® C. Hastelloy is a registered trademark of Haynes International, Inc.
b. IGP10S only

*Table 9. Sensor Body Operating Temperature Limits for Models Listed in Table 8*

| Limiting Factor | Temperature Limits |
|---|---|
| Silicone Fill Fluid | -46 and +121°C (-50 and +250°F) |
| Fluorinert Fill Fluid | -29 and +121°C (-20 and +250°F) |
| Neobee Fill Fluid | -18 and +204°C (0 and 400°F) (a) |
| pvdf Inserts | -7 and +82°C (20 and 180°F) |

a. At process connection

For transmitters with pressure seals, the temperature limits at the seals are shown in Table 10. The pressure seal fill fluid code is found in the pressure seal model code as shown in the following examples (fill fluid code position is underlined and bolded):

| | |
|---|---|
| PSFLT | PSFLT-B2S015**3** |
| PSFPS and PSFES | PSFPS-A2S013**3**4E |
| PSFAR | PSFAD-D232SSS2SBC**1**3M |
| PSFAD | PSFAD-D232SSS2SBC**1** |
| PSFFR | PSFFR–A3S0E3**1**4B-FC |
| PSFFD | PSFFD–1S03**2**1 |
| PSTAR | PSTAR-B32USSS1BCC**3**4F |
| PSTAD | PSTAR-B32USSS1BCC**3** |
| PSISR | PSISR-A23JSSS1SC**1**4M |
| PSISD | PSISD-A23JSSS1SC**1** |
| PSSCR | PSSCR-D21S3**5**4H |
| PSSCT | PSSCT-B21S**5**5 |
| PSSSR | PSSSR-B4S23**5**4H |
| PSSST | PSSST-B4S2**5**5 |

*Table 10. Seal Fill Fluid and Operating Temperature Limits*

| Code | Fill Fluid | Temperature Limits | |
|---|---|---|---|
| | | Direct Connected (a), (b) PSFLT, PSFFD, PSFAD, PSTAD, PSISD | Remote Connected (b) PSFPS, PSFES, PSFFR, PSFAR, PSTAR, PSISR, PSSCR |
| 1 | DC200, 10cS, Silicone | -40 and +204°C (-40 and +400°F) | -40 and +204°C (-40 and +400°F) |
| 2 | FC77 Fluorinert | -59 and +82°C (-75 and +180°F) | -59 and +82°C (-75 and +180°F) |
| 3 | DC200, 3cS, Silicone | -40 and +149°C (-40 and +300°F) | -40 and +149°C (-40 and +300°F) |
| 4 | DC704 (HTF) Silicone | 0 and +204°C (32 and 400°F) | 0 and +304°C (32 and 580°F) |
| 5 | Neobee | -18 and +204°C (0 and 400°F) | -18 and +204°C (0 and 400°F) |
| 6 | Halocarbon 4.2 | -45 and +160°C (-49 and +320°F) | -45 and +160°C (-49 and +320°F) |
| 7 | Syltherm XLT | -73 and +149°C (-100 and +300°F) | -73 and +149°C (-100 and +300°F) |

a. Limited to 204°C (400°F) maximum regardless of fill fluid due to transmitter maximum temperature limits.
b. PSFAR, PSFAD, PSTAR, PSTAD, PSISR, and PSISD seals with ptfe gaskets are limited to 60°C (140°F).

# Process Wetted Materials

Refer to Table 8 to determine if the process cover and sensor diaphragm material are suitable for the process. For transmitters with pressure seals, seal wetted materials are listed in the following sections.

# Pressure Seals PSFLT and PSFPS

*Table 11. Pressure Seal PSFLT and PSFPS Wetted Materials*

| Material Code | Material |
|---|---|
| S | 316L ss |
| C | Nickel alloy (a) |
| T | Tantalum |

a. Equivalent to Hastelloy® C. Hastelloy is a registered trademark of Haynes International, Inc.

The process wetted material code is found in the pressure seal model number which is located on the pressure seal. See following example:

PSFLT-B2S0153
└─SEAL WETTED MATERIAL

# Pressure Seal PSFES

*Table 12. Pressure Seal PSFES Wetted Materials*

| Material Code | Material |
|---|---|
| S | 316L ss |
| C | Nickel alloy (a) |

a. Equivalent to Hastelloy® C. Hastelloy is a registered trademark of Haynes International, Inc.

The process wetted material code is found in the pressure seal model number which is located on the pressure seal. See following example:

PSFES-A2S21334H
└─SEAL WETTED MATERIAL

# Pressure Seals PSFAR, PSFAD, PSTAR, PSTAD, PSISR, and PSISD

*Table 13. Pressure Seal Lower Housing Materials*

| Material Code | Material |
|---|---|
| S | 316L ss |
| K | Carbon Steel |
| C | Nickel alloy (a) |
| T | Tantalum Plate |
| E | Titanium Grade 4 |
| L | Inconel 600 |
| M | Monel 400 |
| N | Nickel 200 |
| G | Glass Filled ptfe |
| P | Polyvinyl Chloride |

a. Equivalent to Hastelloy® C. Hastelloy is a registered trademark of Haynes International, Inc.

*Table 14. Pressure Seal Diaphragm Materials*

| Material Code | Material |
|---|---|
| S | 316L ss |
| C | Nickel alloy (a) |
| T | Tantalum |
| E | Titanium Grade 2 |
| L | Inconel 600 |
| M | Monel 400 |
| N | Nickel 200 |

a. Equivalent to Hastelloy® C-276. Hastelloy is a registered trademark of Haynes International, Inc.

*Table 15. Pressure Seal Gasket Materials*

| Material Code | Material |
|---|---|
| S | Organic Fiber with Nitrile Binder |
| 3 | Silver Plated 316 ss |
| T | ptfe |
| B | Buna N |
| V | Viton |
| G | Grafoil |
| T | Silver Plated Nickel alloy (a) |

a. Equivalent to Silver Plated Hastelloy® C. Hastelloy is a registered trademark of Haynes International, Inc.

The material codes are found in the pressure seal model number which is located on the pressure seal. See following example:

PSFAR-D232SSS1SA01A

- GASKET MATERIAL
- DIAPHRAGM MATERIAL
- LOWER HOUSING MATERIAL

# Pressure Seals PSSCR

*Table 16. Pressure Seal PSSCR Diaphragm Materials*

| Material Code | Material |
|---|---|
| S | 316L ss |
| C | Nickel alloy (a) |

a. Equivalent to Hastelloy® C. Hastelloy is a registered trademark of Haynes International, Inc.

The diaphragm material code is found in the pressure seal model number which is located on the pressure seal. See following example:

PSSCR-D21S354H
└ DIAPHRAGM MATERIAL

The housing material is 316 ss.
The gasket is provided by the user.

# Pressure Seals PSSCT

The housing material is 316 ss.
The diaphragm material is 316L ss.
The gasket is provided by the user.

# Pressure Seals PSSSR and PSSST

The housing material is 316 ss.
The diaphragm material is 316L ss.
The gasket material is EPDM.

**ISSUE DATES**

JUN 2013
MAR 2016

Vertical lines to the right of text or illustrations indicate areas changed at last issue date.

Invensys Systems, Inc.
38 Neponset Avenue
Foxboro, MA 02035
United States of America
http://www.schneider-electric.com

Global Customer Support
Inside U.S.: 1-866-746-6477
Outside U.S.: 1-508-549-2424
Website: http://support.ips.invensys.com



0316

Foxboro®
by Schneider Electric