Foxboro®
by Schneider Electric

2800 Series Flanged Magnetic Flowtubes Used with Model IMT96 MagEXPERT™, Model E96, or Model IMT25 Magnetic Flow Transmitters 14 to 36 in Sizes; PTFE, Polyurethane, or Neoprene Lined

The Foxboro® brand 2800 Series Flanged Magnetic Flowtubes are used with the Model IMT96 MagEXPERT Intelligent Magnetic Flow Transmitters using eX-Pulse coil excitation, the Model E96 Magnetic Flow Transmitters using ac coil excitation, and the Model IMT25 Magnetic Flow Transmitters with pulsed dc excitation. They measure the volumetric flow rate of virtually any conductive liquid. For 2800 Series flowtubes in 1/2 through 12 in sizes, see PSS 1-6B5 A. For 2800 Series sanitary flowtubes in 1/2 through 3 in sizes, see PSS 1-6B5 C.

SUPERIOR REPUTATION FOR DEPENDABILITY AND QUALITY

Magnetic flow measurement systems were introduced to the process industries in 1954 and has demonstrated the broadest and most time-proven application expertise with tens of thousands of successful large size flowtube installations.

USED WITH EX-PULSE, AC, OR PULSED DC TRANSMITTERS

The 2800 Series Magnetic Flowtubes are calibrated for use with eX-Pulse coil excitation with the Model IMT96 MagEXPERT Transmitters, or for use with ac coil excitation with the E96 Transmitters, or for use with pulsed dc excitation with the IMT25 Transmitters. Numerous calibration options with the above transmitters are offered.

EXCELLENT ZERO STABILITY

Excellent zero stability is inherent in the design. The mechanical design and electronic package feature accurately located and securely mounted coil and electrode assemblies, spring-loaded electrodes, optimized field characterization, and power-driven screens (shields) on the signal leads. All of these features ensure the ultimate in long-term stability and accurate measurement.

TWO YEAR WARRANTY

This product is warranted against defects in workmanship and materials for a period of two years.

HOUSING CONSTRUCTION

These flowtubes are offered with a selection of the following housing construction: a Weatherproof construction housing, an Accidental Submergence construction housing, and a High Humidity - High Condensate construction housing. See paragraphs below.

Weatherproof Construction Housing

This housing is designed for harsh in-plant or outdoor environments. It is weatherproof as defined by IEC IP65, and provides the watertight and corrosion-resistant protection of NEMA Type 4X. Select Housing Code -G.

Accidental Submergence Construction

Not available with integrally-mounted transmitter. This housing is factory sealed to allow 48 hours of operation after being accidentally submerged in a maximum depth of 9 m (30 ft) of water. A field kit is provided to the customer for final sealing after site installation. Select Housing Code -H.

High Humidity/High Condensate Construction

Not available with integrally-mounted transmitter. This construction consists of special sealing techniques to help prevent internal formation of condensate in applications involving cold process temperature and warm ambient, e.g., brewery or dairy processes. Select Housing Code -C.

DESIGNED FOR WIDEST VARIETY OF LIQUIDS

The stainless steel flowtube is lined with a choice of PTFE, neoprene, or polyurethane lining, and also a selection of electrode materials and shapes. These selections enable the flowtubes to handle a wide variety of liquids such as water, slurries, and sticky, abrasive, and highly corrosive processes.

MULTI-AGENCY CERTIFICATION FOR HAZARDOUS LOCATIONS

These flowtubes meet Agency requirements for use in hazardous locations. Refer to “Electrical Safety Specifications” section.

PED QUALIFICATION

This product is PED-qualified in EU applications for SEP (Standard Engineering Practice) Category 1 with Group 2 fluids (nonhazardous).

FLOWEXPERTPRO™

FlowExpertPro is a program primarily used to size Foxboro flowmeters. It also ensures that the user has selected the proper flowmeter type for his application. This meter selection tool is provided as a free web site to all users, without the need for registration. In addition to flowmeter selection and sizing, FlowExpertPro includes the following features:

- Incorporates a large library of the physical properties of typical process fluids.
- Displays results in tabular or graphic format.
- Allows user to save, print, or E-mail results.
- Provides reference to applicable flowmeter PSSs and other related flowmeter documentation.

The program calculates minimum and maximum flow rates, rangeability, pressure loss, and Reynolds Number, using established flow equations. It also allows for material and flange selection, and provides ANSI or metric flange recommendations for predicted flow pressure and temperature. You are invited to visit www.FlowExpertPro.com to access this program, or contact Global Customer Support for further information, and technical support.

FLOWTUBE CALIBRATION

All flowtubes are wet calibrated to verify their specified accuracy with traceability to the U.S. National Institute of Science and Technology (NIST). The calibration produces a calibration factor that is needed to accurately configure the transmitter. The calibration factors for use with MagEXPERT, the E96 Transmitter, or the IMT25 Transmitters are different.

The selection of calibration type is done in the Flowtube Model Code (refer to Model Code section - Nominal Supply Voltage and Frequency). If the transmitter type is changed later, the calibration factor can be converted by calculation. This calibration factor, however, will be slightly less accurate than that derived by wet calibration.

OPERATING CONDITIONS

Influence	Reference Operating Conditions	Normal Operating Condition Limits	Operative Limits
Ambient Temperature	23 ±2°C (73 ±3°F)	–10 and +50°C (20 and 120°F)	–28 and +60°C (–20 and +140°F)
Process Pressure and Process Temperature	Varies with Line Size, Flange Rating, and Flowtube Lining Material. Refer to Tables 4, 5, and 3.		

PERFORMANCE SPECIFICATIONS

(Combined Flowtube and Transmitter System under Reference Operating Conditions)

2800 Flowtube with Model E96 Transmitter	Refer to PSS 1-6C1 A
2800 Flowtube with Model IMT96 MagEXPERT Transmitter	Refer to PSS 1-6F8 A
2800 Flowtube with Model IMT25 Transmitter (HART)	Refer to PSS 1-6F5 A

FUNCTIONAL SPECIFICATIONS

Nominal Line Sizes

350, 400, 450, 500, 600, 750, and 800 mm
(14, 16, 18, 20, 24, 30, and 36 in)

End Connections

ANSI, AWWA, and Metric Flanges. Refer to Model Code section for flange type, size, and material.

Process Pressure and Temperature Limits

See Tables 3, 4, and 5.

Power Consumption

Refer to Table 2.

Minimum and Maximum Flow Measurement Ranges

The Model IMT96 MagEXPERT Transmitter and Model E96 Transmitter, when used with a 2800 Series Flowtube, can be adjusted to vary the flowrate required to produce a 100% output signal. The minimum and maximum flow measurement ranges for each flowtube size are listed in Table 2. Normally, selecting the flowtube size is as simple as matching the pipeline size. Table 2 can be used to verify this selection, or to select a different size, if your flowrate is unusual. The minimum upper range value (URV) reflects that flowrate required to generate enough flow signal to produce a 100% output. The maximum URV mainly refers to liner wear with normal fluids. Depending on the abrasiveness of the fluid, the maximum URV limit should be reduced. Also visit FlowExpertPro.com.

Signal and Power Wiring

Refer to the “Options and Accessories” section for signal and power cabling recommended between the flowtube and transmitter.

Minimum Conductivity of Process Liquid

Refer to Model IMT96 MagEXPERT, Model E96, or Model IMT25 Transmitter literature for information relating to the relationship between conductivity and cable configuration (length, type, and installation). For the electrical conductivity of more than 200 process liquids, refer to TI 027-072.

Process Liquid Ground

Grounding is through the flange bolts if the connecting piping is unlined metal. If the connecting piping is nonmetallic or lined, grounding rings are required at each end of the flowtube. Grounding rings are available as required.

Upstream and Downstream Piping

The flowtube should have straight, unobstructed piping for a minimum distance of five pipe diameters (5 PDs) upstream and 3 PDs downstream (measured from the center of the flowtube) to ensure optimum performance. Adjacent process piping should have the same diameter or be slightly larger than the flowtube.

Lining and Electrode Application Guide

See Table 1 for recommended lining applications. Also refer to TI 27-71f (Magnetic Flowtube Material Selection Guide) for ratings of process-wetted materials (linings and electrodes) with over 150 process liquids.

Table 1. Fluid Characteristics versus Flowtube Linings - Application Guide

Flowtube Lining	Fluid Characteristic (a) (b)					
	Clean	Mild Corrosion	Severe Corrosion	Mild Abrasion	Severe Abrasion (c)	Mild Corrosion and Abrasion
PTFE Lining	A	A	A	B	X	B
Polyurethane Lining	A	B	X	A	A	B
Neoprene Lining	A	A	X	A	X	A

a. A = Preferred: Generally considered best choices.
B = Satisfactory: Reasonable life under most conditions.
X = Not Recommended: Generally considered unsuitable.

b. This product is qualified for SEP (Standard Engineering Practice) Category 1 with Group 2 fluids (nonhazardous).

c. Severe abrasion rating also includes/considers effects on electrodes.

Table 2. Flowtube Selection Based on Transmitter Model, Flow Measurement Range, and Liner Material

Nominal Line Size		Trans-mitter Model (e)	Power to Flowtube			Flow Measurement Range(c)				Liner Mat'l (d)
mm	in		Supply Voltage and Coil Connection(a)(b)	Watts	VA	Minimum L/min	Maximum L/min	Minimum U.S.gpm	Maximum U.S. gpm	
350	14	E96	A[p]; B[s] C[p]; (D or E)[s] (B or D)[p]	120	720	0 to 6050	0 to 54 500 (c)	0 to 1600	0 to 14 400 (c)	T,P,N
				150	900	0 to 4900		0 to 1300		
				550	2800	0 to 3025		0 to 800		
		IMT96	Pwr by IMT96[s]	–	70	0 to 2750		0 to 725		
400	16	E96	A[p]; B[s] C[p]; (D or E)[s] (B or D)[p]	150	840	0 to 7550	0 to 72 000 (c)	0 to 2000	0 to 19 000 (c)	T,P,N
				180	1050	0 to 6450		0 to 1700		
				675	3360	0 to 3875		0 to 1000		
		IMT96	Pwr by IMT96[s]	–	70	0 to 3600		0 to 950		
450	18	E96	A[p]; B[s] C[p]; (D or E)[s] (B or D)[p]	180	960	0 to 11 000	0 to 91 000 (c)	0 to 2900	0 to 24 000 (c)	T,P,N
				220	1200	0 to 9100		0 to 2400		
				805	3840	0 to 5500		0 to 1450		
		IMT96	Pwr by IMT96[s]	–	70	0 to 4550		0 to 1200		
500	20	E96	A[p]; B[s] C[p]; (D or E)[s] (B or D)[p]	215	1080	0 to 12 500	0 to 114 000 (c)	0 to 3300	0 to 30 000 (c)	T,P,N
				260	1300	0 to 10 200		0 to 2700		
				960	4320	0 to 6250		0 to 1650		
		IMT96	Pwr by IMT96[s]	–	70	0 to 5680		0 to 1500		
600	24	E96	A[p]; B[s] C[p]; (D or E)[s] (B or D)[p]	265	1260	0 to 20 800	0 to 162 000 (c)	0 to 5500	0 to 43 000 (c)	T,P,N
				320	1550	0 to 16 650		0 to 4400		
				1150	5040	0 to 10 400		0 to 2750		
		IMT96	Pwr by IMT96[s]	–	70	0 to 8150		0 to 2150		
750	30	E96	A[p]; B[s] C[p]; (D or E)[s] (B or D)[p]	330	1650	0 to 29 000	0 to 258 000 (c)	0 to 7700	0 to 68 000 (c)	P, N Only
				400	1900	0 to 25 350		0 to 6700		
				1465	6240	0 to 14 500		0 to 3850		
		IMT96	Pwr by IMT96[s]	–	70	0 to 12 900		0 to 3400		
900	36	E96	A[p]; B[s] C[p]; (D or E)[s] (B or D)[p]	420	1800	0 to 45 400	0 to 374 000 (c)	0 to 12 000	0 to 99 000 (c)	P, N Only
				500	2200	0 to 37 850		0 to 10 000		
				1680	7200	0 to 22 700		0 to 6000		
		IMT96	Pwr by IMT96[s]	–	70	0 to 19 000		0 to 5000		

(a) A = 120 V ac, 60 Hz; B = 240 V ac, 60 Hz; C = 120 V ac, 50 Hz; D = 220 V ac, 50 Hz; E = 240 V ac, 50 Hz; and [s] = Series connection of the flowtube coils; and [p] = Parallel connection of the flowtube coils.

(b) IMT96 (MagEXPERT) Power Options are 120, 240 V ac, 60 Hz, or 230 V ac, 50 Hz. In table above, Pwr = power. IMT96 Transmitters may only be connected to 2800 Series Flowtubes which have coils in series [s] connection.

(c) Higher flow rates are permissible, but may accelerate liner wear.

(d) T = PTFE (polytetrafluoroethylene, Teflon); P = polyurethane; and N = Neoprene.

(e) When using these flowtubes with the Model IMT25 Transmitter, ECEP 13420D must be specified. Contact Global Customer Support for further information.

Table 3. Process Pressure and Temperature Limits - PTFE-Lined Flowtubes (Models 2814 to 2824 Only)

Rating	Flowtube Model	Process Pressure Limits		Process Temperature Limits	
		Lower Limit	Upper Limit	Lower Limit	Upper Limit
ANSI Class 150	2814 and 2816	Zero (No Vacuum)	1.38 MPa (200 psig)	-18°C (0°F)	82°C (180°F)
	2818 to 2824	Zero (No Vacuum)	1.03 MPa (150 psig)		
Metric PN 10	2814 to 2824	Zero (No Vacuum)	1.00 MPa (145 psig)		
Metric PN 6	2814 to 2824	Zero (No Vacuum)	0.60 MPa (87 psig)		

Table 4. Process Pressure and Temperature Limits — Polyurethane-Lined Flowtubes

Flange Rating	Flowtube Model	Process Pressure Limits		Process Temperature Limits	
		Lower Limit	Upper Limit	Lower Limit	Upper Limit
ANSI Class 150	2814 and 2816	Full Vacuum	1.38 MPa (200 psig)	-18°C (0°F)	71°C (160°F)
	2818 to 2824	Full Vacuum	1.03 MPa (150 psig)		
AWWA Class D	2830	Full Vacuum	0.69 MPa (100 psig)		
	2836	Full Vacuum	0.62 MPa (90 psig)		
Metric PN 10	2814 to 2824	Full Vacuum	1.00 MPa (145 psig)		
	2830	Full Vacuum	0.69 MPa (100 psig)		
	2836	Full Vacuum	0.62 MPa (90 psig)		
Metric PN 6	2814 to 2836	Full Vacuum	0.60 MPa (87 psig)		

Table 5. Process Pressure and Temperature Limits — Neoprene-Lined Flowtubes

Flange Rating	Flowtube Model	Process Pressure Limits		Process Temperature Limits	
		Lower Limit	Upper Limit	Lower Limit	Upper Limit
ANSI Class 150	2814 and 2816	Full Vacuum	1.38 MPa (200 psig)	-18°C (0°F)	82°C (180°F)
	2818 to 2824	Full Vacuum	1.03 MPa (150 psig)		
AWWA Class D	2830	Full Vacuum	0.69 MPa (100 psig)		
	2836	Full Vacuum	0.62 MPa (90 psig)		
Metric PN 10	2814 to 2824	Full Vacuum	1.00 MPa (145 psig)		
	2830	Full Vacuum	0.69 MPa (100 psig)		
	2836	Full Vacuum	0.62 MPa (90 psig)		
Metric PN 6	2814 to 2836	Full Vacuum	0.60 MPa (87 psig)		

PHYSICAL SPECIFICATIONS

Enclosure Construction

Housing is fabricated from fiberglass reinforced plastic (FRP), and gaskets are used to seal all joints. Enclosure is finished with a polyurethane paint. Offered for IEC IP65 and NEMA 4X, accidental submergence, or high humidity/high condensate applications, as specified.

Electrode Materials

316L ss, Tantalum-Tungsten, Hastelloy C, Platinum-Iridium, or Titanium, depending on flowtube lining material selected. See Model Code section.

Flat Head and Conical Head Electrodes

Standard flat head electrodes are offered with all electrode materials. The conical head electrode is offered when fluids can cause coatings to deposit on the electrode surface, possibly degrading measurement accuracy. Conical head electrodes are available in 316L ss or Hastelloy C materials for flowtubes with PTFE lining. The conical head extends out through deposits into a higher velocity area of the flow profile where process liquid tends to sweep the electrodes clean. See Figure 1 for flat and conical head electrode configurations.

Figure 1. Inside Surface of Flowtube Showing Flat Head and Conical Head Electrodes

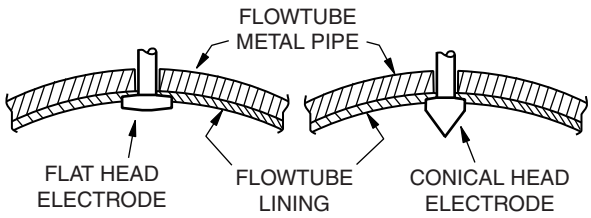

Electrical Connections

The housing has three 3/4 NPT tapped holes for signal and power connections. Refer to “Optional Selections” section for cable glands offered for nonconduit applications, or a signal cable seal for conduit applications.

End Connection

ANSI Class 150 raised face flanges, AWWA Class D flanges, and Metric PN 6 and PN 10 raised face flanges, as specified. Refer to Tables 3, 4, and 5 for process pressure and temperature limits with each flange type and line size.

Mounting Position

The flowtube can be mounted in any orientation, provided it remains full of process liquid, and the electrodes are in the horizontal plane.

Data Plate

Stainless steel data plate fastened to instrument with drive screws. Includes space for customer tag data up to a maximum of 60 characters and spaces. For additional space, see optional Customer Tag.

Approximate Mass

Model 2814	170 kg (375 lb)
Model 2816	195 kg (425 lb)
Model 2818	215 kg (475 lb)
Model 2820	285 kg (625 lb)
Model 2824	410 kg (900 lb)
Model 2830	545 kg (1200 lb)
Model 2836	660 kg (1450 lb)

ELECTRICAL SAFETY SPECIFICATIONS

Electrical Classification

Testing Laboratory, Types of Protection, and Area Classification	Conditions of Certification	Certification Specification (a)
CSA certified for use in Class I, Groups A, B, C, and D, Division 2.	Models 2814 through 2824 only Temperature Class T3	CS-E/CN-A
FM approved for use in Class I, Groups A, B, C, and D, Division 2.	Models 2814 through 2824 only Temperature Class T3	CS-E/FN-A

a. Contact Global Customer Support if additional information is required.

OPTIONAL SELECTIONS AND ACCESSORIES

Power Wiring

Power wiring to the flowtube is dependent on the transmitter to be used. Refer to the applicable transmitter installation literature for more detail.

Signal Cable

Two-core (two-conductor), multiscreened (multishielded) cable with two driven screens (shields). Refer to applicable transmitter literature regarding the application and selection of this signal cable. Specify Part No. R0101ZS and length in feet, or Part No. B4017TE and length in meters.

CERT E: Flowtube Calibration Certificate

When specified, a certificate is provided showing calibration data for the instrument, and that it is traceable to the National Institute of Standards and Technology (NIST). Specify AS Code CERT-E.

Certified System Calibration

- The flowtube and E96 Transmitter (with analog and/or pulse rate output option) are calibrated to ±0.5% of flow rate for flow velocities greater than 1 m/s (±0.5% of the 1 m/s flow rate for flow velocities less than 1 m/s).
- The flowtube and the Model IMT96 MagEXPERT Transmitter can be multi-point system calibrated to the standard accuracy. See the applicable transmitter PSS.
- The flowtube and a remote Model IMT25 are calibrated together at the Flow Facility per ECEP 13420D.
- The certified system calibration can be performed at flow rates up to 45,425 L/min (12 000 U.S. gpm), and with flowtube sizes up to 600 mm (24 in).

A comprehensive certified system calibration report is provided with all data and graphs for five-point calibration distributed over the specified range. The specification for this option must identify the instruments (flowtube, transmitter, etc.) to be calibrated together. Specify Certified System Calibration.

Option -G: Signal Cable Gland

Usually selected for nonconduit applications to provide rain tight, strain relieved entrance for the signal cable. External 3/4 NPT threads into flowtube terminal housing. Body and compression nut are nylon, and compression gland is neoprene. This gland can also be used on the transmitter. Three cable glands are provided. Select Option -G.

Figure 2. Option -G: Signal Cable Gland

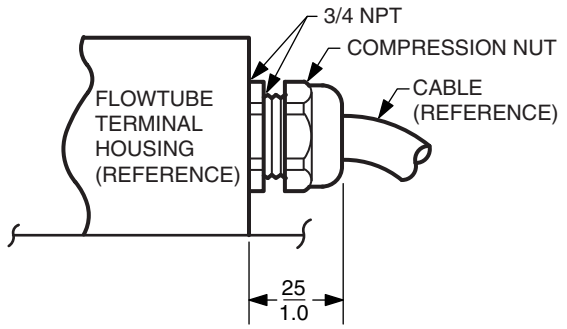

Option -S: Signal Cable Seal

Usually selected for conduit applications to provide a means of clamping and sealing the signal cable. External 3/4 NPT threads into flowtube terminal housing. As installed, the cable seal accommodates a 1/2 NPT conduit. By removing the reducer, a 3/4 NPT conduit can be used. One signal cable seal is provided. Select Model Code Option -S.

Figure 3. Option -S: Signal Cable Seal

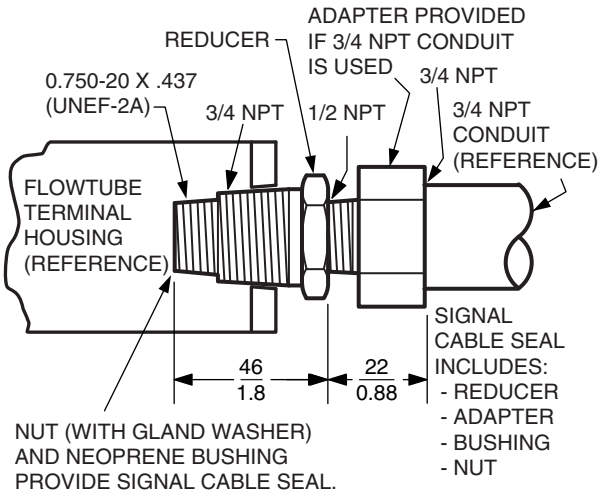

Options -U, -W, and -Z: Ultrasonic Electrode Cleaning Options

Available on all flowtube sizes, except those flowtubes with tantalum or platinum-iridium electrodes. Vibrations of 65 ±10 kHz are continuously applied to electrodes to prevent accumulation of coatings, or to remove certain coatings which can interfere with the flow measurement.

Optional Selection -U consists of two main components: a pair of electrode drivers (transducers) internal to the flowtube housing, and a pipe or wall mounted oscillator power supply unit, with 7.6 m (25 ft) connecting cable.

Optional Selection -W provides an ultrasonic driver assembly with cable and junction box for use with a portable ultrasonic electrode cleaner (Part No. D0183NG).

Optional Selection -Z is selected to facilitate addition of field-addition of ultrasonic cleaning, if needed. Electrode drivers are built in, and the oscillator power supply can be ordered later. Contact Global Customer Support for further details.

Grounding Ring

If connecting piping is lined metal or nonmetallic, grounding rings are required at each end of the flowtube. Grounding rings (i.e., orifice plates) are available in 316 ss, Hastelloy C, Monel, and Tantalum material. Specify flowtube line size and lining material, in addition to grounding ring material. Contact Global Customer Support for further information.

Customer Tag

Stainless steel tag wired to instrument for customer tag data that doesn't fit on data plate. There can be a maximum of 10 lines of data with 40 characters and spaces per line. Specify AS Reference MTS.

MODEL CODE - PTFE LINED FLANGED MAGNETIC FLOWTUBES

Description	Code
350 mm (14 in) Nominal Line Size	2814
400 mm (16 in) Nominal Line Size	2816
450 mm (18 in) Nominal Line Size	2818
500 mm (20 in) Nominal Line Size	2820
600 mm (24 in) Nominal Line Size	2824
Tube Construction	
AISI Type 304 Stainless Steel (304 ss), 3.18 mm (0.125 in) Wall Thickness	-SE
End Connections	
ANSI Class 150 Flange, Carbon Steel	BA
EN 1092-1, PN 10 Flange, Carbon Steel	ZD
EN 1092-1, PN 6 Flange, Carbon Steel	ZZ
Flowtube Lining	
PTFE	-T
Electrode Material and Head Style	
Tantalum-Tungsten - Flat Head	B
316L ss - Conical Head	C
Hastelloy C - Flat Head	H
Hastelloy C - Conical Head	K
Platinum-10% iridium - Flat Head	P
AISI Type 316L Stainless Steel (316L ss) - Flat Head	S
Titanium - Flat Head	T
Nominal Supply Voltage and Frequency	
Used with 120 V, 60 Hz (E96) (Parallel Coils Only)	A
Used with 240 V, 60 Hz (E96) (Series or Parallel Coils Only)	B
Used with 120 V, 50 Hz (E96) (Parallel Coils Only)	C
Used with 220 V, 50 Hz (E96) (Series or Parallel Coils Only)	D
Used with 240 V, 50 Hz (E96) (Series Coils Only)	E
Used with Pulsed dc from 896 Transmitter (Series Coils Only) (a)	F
Dual Calibration for Pulsed dc from 896 Transmitter (Series Coils Only) (a); or 120 V or 240 V, 60 Hz, as specified	G
Used with IMT96, 60 Hz	K
Used with IMT96, 50 Hz	L
Dual Calibration for use with IMT96, or 120 V, 60 Hz (E96)	M
Dual Calibration for use with IMT96, or 240 V, 60 Hz (E96)	N
Dual Calibration for use with IMT96, or 120 V, 50 Hz (E96)	Q
Dual Calibration for use with IMT96, or 230 V, 50 Hz (E96)	R
Dual Calibration for use with IMT96, or 240 V, 50 Hz (E96)	S
Housing Construction	
General Purpose, NEMA 4X Housing	-G
Accidental Submergence Housing (b) (c)	-H
High Humidity/Condensate Housing (d)	-C
Optional Selections (More than one of the Options below may be selected, as applicable)	
Cable Glands; Select for Nonconduit Applications (not available with -S Option) (e)	-G
Signal Cable Seal; Select for Conduit Applications (not available with -G Option) (e)	-S
Ultrasonic Electrode Cleaning - Transducer with Oscillator and Cable	-U
Ultrasonic Electrode Cleaning - Transducer, Cable, and Junction Box for Portable Oscillator	-W
Ultrasonic Electrode Cleaning - Transducer Only	-Z
Examples: 2814-SEBA-ASA-G-G, 2836-SEZD-NSE-G-SU	

a. 896 Transmitters are no longer sold. Use this selection for a replacement tube used with the existing 896 in the field.
b. Not with integrally mounted transmitters.
c. Sealed for accidental operation under water up to 9 m (30 ft) deep for 48 hours. Supplied with a kit for final sealing after installation.
d. The -C housing is recommended for warm ambient, cold process service; e.g. brewery and dairy processes.
e. The cable glands (-G option) selected here provide glands for field wiring to the flowtube junction box. Glands are generally specified in nonconduit applications. For conduit applications, specify Signal Cable Seal Option -S.

MODEL CODE - POLYURETHANE LINED FLANGED MAGNETIC FLOWTUBES

Description	Code
350 mm (14 in) Nominal Line Size	2814
400 mm (16 in) Nominal Line Size	2816
450 mm (18 in) Nominal Line Size	2818
500 mm (20 in) Nominal Line Size	2820
600 mm (24 in) Nominal Line Size	2824
750 mm (30 in) Nominal Line Size	2830
900 mm (36 in) Nominal Line Size	2836
Tube Construction	
AISI Type 304 Stainless Steel (304 ss), 3.18 mm (0.125 in) Wall Thickness	-SE
End Connections	
ANSI Class 150 Flange, Carbon Steel, 2814 through 2824 Only	BA
AWWA Class D Flange, Carbon Steel, Models 2830 and 2836 Only	WB
EN 1092-1, PN 10 Flange, Carbon Steel	ZD
EN 1092-1, PN 6 Flange, Carbon Steel	ZZ
Flowtube Lining	
Polyurethane	-A
Electrode Material	
AISI Type 316L Stainless Steel (316L ss)	S
Nominal Supply Voltage and Frequency	
Used with 120 V, 60 Hz (E96) (Parallel Coils Only)	A
Used with 240 V, 60 Hz (E96) (Series or Parallel Coils Only)	B
Used with 120 V, 50 Hz (E96) (Parallel Coils Only)	C
Used with 220 V, 50 Hz (E96) (Series or Parallel Coils Only)	D
Used with 240 V, 50 Hz (E96) (Series Coils Only)	E
Used with Pulsed dc from 896 Transmitter (Series Coils Only) (a)	F
Dual Calibration for Pulsed dc from 896 Transmitter (Series Coils Only) (a); or 120 V or 240 V, 60 Hz, as specified	G
Used with IMT96, 60 Hz	K
Used with IMT96, 50 Hz	L
Dual Calibration for use with IMT96, or 120 V, 60 Hz (E96)	M
Dual Calibration for use with IMT96, or 240 V, 60 Hz (E96)	N
Dual Calibration for use with IMT96, or 120 V, 50 Hz (E96)	Q
Dual Calibration for use with IMT96, or 230 V, 50 Hz (E96)	R
Dual Calibration for use with IMT96, or 240 V, 50 Hz (E96)	S
Housing Construction	
General Purpose, NEMA 4X Housing	-G
Accidental Submergence Housing (b) (c)	-H
High Humidity/Condensate Housing (d)	-C

MODEL CODE - POLYURETHANE LINED FLANGED MAGNETIC FLOWTUBES (CONTINUED)

Description	Code
Optional Selections (More than one of the Options below may be selected, as applicable)	
Cable Glands; Select for Nonconduit Applications (not available with -S Option) (e)	-G
Signal Cable Seal; Select for Conduit Applications (not available with -G Option) (e)	-S
Ultrasonic Electrode Cleaning - Transducer with Oscillator and Cable	-U
Ultrasonic Electrode Cleaning - Transducer, Cable, and Junction Box for Portable Oscillator	-W
Ultrasonic Electrode Cleaning - Transducer Only	-Z
Examples: 2814-SEBA-ASA-G-G, 2836-SEZD-NSE-G-SU	

a. 896 Transmitters are no longer sold. Use this selection for a replacement tube used with the existing 896 in the field.

b. Not with integrally mounted transmitters.

c. Sealed for accidental operation under water up to 9 m (30 ft) deep for 48 hours. Supplied with a kit for final sealing after installation.

d. The -C housing is recommended for warm ambient, cold process service; e.g. brewery and dairy processes.

e. The cable glands (-G option) selected here provide glands for field wiring to the flowtube junction box. Glands are generally specified in nonconduit applications. For conduit applications, specify Signal Cable Seal Option -S.

MODEL CODE - NEOPRENE LINED FLANGED MAGNETIC FLOWTUBES

Description	Code
350 mm (14 in) Nominal Line Size	2814
400 mm (16 in) Nominal Line Size	2816
450 mm (18 in) Nominal Line Size	2818
500 mm (20 in) Nominal Line Size	2820
600 mm (24 in) Nominal Line Size	2824
750 mm (30 in) Nominal Line Size	2830
900 mm (36 in) Nominal Line Size	2836
Tube Construction	
AISI Type 304 Stainless Steel (304 ss), 3.18 mm (0.125 in) Wall Thickness	-SE
End Connections	
ANSI Class 150 Raised Face (RF) Flange, Carbon Steel, 2814 through 2824 Only	BA
AWWA Class D Flange, Carbon Steel, Models 2830 and 2836 Only	WB
EN 1092-1, PN 10 Flange, Carbon Steel	ZD
EN 1092-1, PN 6 Flange, Carbon Steel	ZZ
Flowtube Lining	
Neoprene	-N
Electrode Material	
AISI Type 316L Stainless Steel (316L ss)	S
Nominal Supply Voltage and Frequency	
Used with 120 V, 60 Hz (E96) (Parallel Coils Only)	A
Used with 240 V, 60 Hz (E96) (Series or Parallel Coils Only)	B
Used with 120 V, 50 Hz (E96) (Parallel Coils Only)	C
Used with 220 V, 50 Hz (E96) (Series or Parallel Coils Only)	D
Used with 240 V, 50 Hz (E96) (Series Coils Only)	E
Used with Pulsed dc from 896 Transmitter (Series Coils Only) (a)	F
Dual Calibration for Pulsed dc from 896 Transmitter (Series Coils Only) (a); or 120 V or 240 V, 60 Hz, as specified	G
Used with IMT96, 60 Hz	K
Used with IMT96, 50 Hz	L
Dual Calibration for use with IMT96, or 120 V, 60 Hz (E96)	M
Dual Calibration for use with IMT96, or 240 V, 60 Hz (E96)	N
Dual Calibration for use with IMT96, or 120 V, 50 Hz (E96)	Q
Dual Calibration for use with IMT96, or 230 V, 50 Hz (E96)	R
Dual Calibration for use with IMT96, or 240 V, 50 Hz (E96)	S
Housing Construction	
General Purpose, NEMA 4X Housing	-G
Accidental Submergence Housing (b) (c)	-H
High Humidity/Condensate Housing (d)	-C
Optional Selections (More than one of the Options below may be selected, as applicable)	
Cable Glands; Select for Nonconduit Applications (not available with -S Option) (e)	-G
Signal Cable Seal; Select for Conduit Applications (not available with -G Option) (e)	-S
Ultrasonic Electrode Cleaning - Transducer with Oscillator and Cable	-U
Ultrasonic Electrode Cleaning - Transducer, Cable, and Junction Box for Portable Oscillator	-W
Ultrasonic Electrode Cleaning - Transducer Only	-Z
Examples: 2814-SEBA-ASA-G-G, 2836-SEZD-NSE-G-SU	

a. 896 Transmitters are no longer sold. Use this selection for a replacement tube used with the existing 896 in the field.

b. Not with integrally mounted E96T Transmitter.

c. Sealed for accidental operation under water up to 9 m (30 ft) deep for 48 hours. Supplied with a kit for final sealing after installation.

d. The -C housing is recommended for warm ambient, cold process service; e.g. brewery and dairy processes.

e. The cable glands (-G option) selected here provide glands for field wiring to the flowtube junction box. Glands are generally specified in nonconduit applications. For conduit applications, specify Signal Cable Seal Option -S.

DIMENSIONS – NOMINAL

mm
in

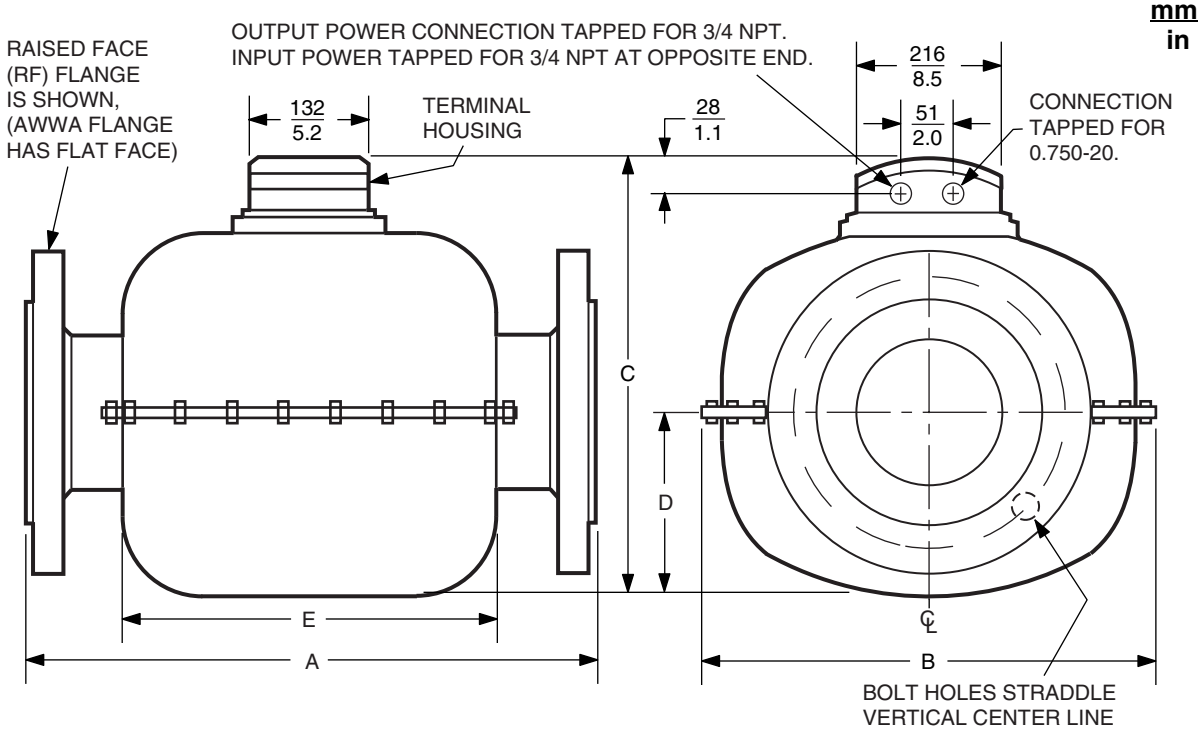

Nominal Line Size		A	A					I.D.	I.D.	I.D.	Approximate Mass	
mm	in	(a)	(b) (c)	B	C	D	E	(a)	(b)	(c)	kg	lb
350	14	726 28.6	711 28.0	813 32.0	734 28.9	330 13.0	508 20.0	341.4 13.44	337.9 13.25	339.9 13.38	170	375
400	16	772 30.6	762 30.0	813 32.0	734 28.9	330 13.0	508 20.0	391.1 15.40	387.4 15.25	390.9 15.38	195	425
450	18	879 34.6	864 34.0	998 39.3	886 34.9	404 15.9	660 26.0	440.9 17.36	438.1 17.25	441.5 17.38	215	475
500	20	879 34.6	864 34.0	998 39.3	886 34.9	404 15.9	660 26.0	490.7 19.32	488.9 19.25	492.3 19.38	285	625
600	24	980 38.6	965 38.0	1209 47.6	1092 43.0	505 19.9	742 29.2	592.3 23.32	584.2 23.00	593.9 23.38	410	900
750	30	N/A	1067 42.0	1473 58.0	1214 47.8	579 22.8	889 35.0	N/A	736.6 29.00	746.3 29.38	545	1200
900	36	N/A	1219 48.0	1676 66.0	1372 54.0	645 25.5	2040 80.3	N/A	889.0 35.00	898.7 35.38	660	1450

a. PTFE lining
b. Polyurethane lining
c. Neoprene lining

ORDERING INSTRUCTIONS

1 Model Number
2 Specify Series or Parallel Coil Connection. (Only applicable for E96 Transmitter.)
3 Flow Rate Normal and Maximum Range Values. Upper Range Value must be within Minimum and Maximum URVs shown in Table 2.
4 Process Pressure-Temperature Range
5 Process Composition and Conductivity
6 Grounding Rings (if Mating Piping is Nonmetallic or Lined Metallic Piping)
7 Signal Cable Length
8 Electrical Certification Specification (See Electrical Safety Specifications Section)
9 Options and Accessories - if not included in Model Code Optional Selections.
10 Customer Tag Data

FLOWEXPERTPRO SIZING APPLICATION

FlowExpertPro.com

Mobile application

OTHER FOXBORO PRODUCTS

The Foxboro product lines offer a broad range of measurement and instrument products, including solutions for pressure, flow, analytical, temperature, positioning, controlling, and recording. For a list of these offerings, visit our web site at:

www.schneider-electric.com

Foxboro®
by Schneider Electric

Invensys Systems, Inc.
38 Neponset Avenue
Foxboro, MA 02035
United States of America
http://www.schneider-electric.com

Global Customer Support
Inside U.S.: 1-866-746-6477
Outside U.S.: 1-508-549-2424
Website: http://support.ips.invensys.com

Copyright 1986-2016 Invensys Systems, Inc.
All rights reserved.

Invensys, Foxboro, MagEXPERT, and FlowExpertPro are trademarks of Invensys Limited, its subsidiaries, and affiliates. All other trademarks are the property of their respective owners.

Invensys is now part of Schneider Electric.