Instruction

MI 020-505
February 2016

PC50 Intelligent Field Device Tool

Operation Using HART® Communication Protocol

Foxboro®

by Schneider Electric

Contents

Figures

Preface

This manual explains how to operate, calibrate, and configure devices having a HART® communication protocol with the PC50 Field Device Tool software package.

Chapter 1 provides information that is common to using the PC50 Field Device Tool with various transmitters with HART communication protocol. This is followed by chapters on each applicable Intelligent Device. These chapters show the product structure to access each function and an explanation of each parameter.

Therefore, to use this manual, refer to Chapter 1, "Common Information" for information that is common to all devices and to the appropriate chapter shown in the table below for procedures on how to communicate with your specific Intelligent Device.

Device	Chapter
I/A Series® Pressure Transmitters	2
RTT20 (TI20) Temperature Transmitters	3
IMT25 and IMT25L Magnetic Flow Transmitters	4
83 Series Vortex Flowmeters	5
140 Series Pressure and Level Transmitters	6
SRD991, SRD970, SRD960, and NAF LinkIT Intelligent Positioners	7
CFT50 Mass Flow Transmitters	8
IMV25, IMV30, and IMV31 I/A Series Multivariable Transmitters	9
RTT15 Temperature Transmitter	10
875PH pH/ORP/ISE Analyzers	11
875EC Electrodeless Conductivity Analyzers	12
875CR Conductivity/Resistivity Analyzers	13

1. Common Information

This chapter provides information that is common to using the PC50 Field Device Tool (FDT) with various transmitters with HART® communication protocol.

Measurements

Dynamic measurements can be accessed via:

- The appropriate submenu in `Device > Online Parameterization`
- The path `Device > Measured Value`

Figure 1. Sample Measurement Display

Diagnosis

The Diagnosis function interrogates the connected device and displays dynamic status information. The function is accessed via:

- The appropriate submenu in `Device > Online Parameterization`
- The path `Device > Diagnosis`

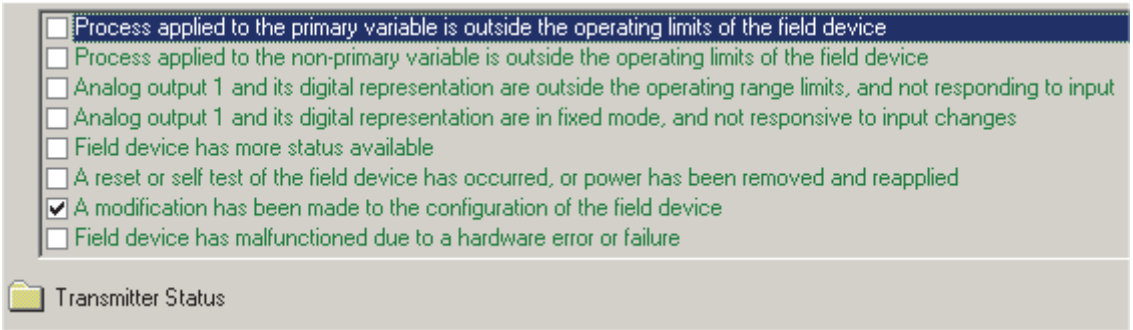

Figure 2. Sample Diagnosis Display

Trend

The Trend Viewer interrogates the connected device and displays dynamic measurement information over time. The function is accessed via the path `Device > Additional functions > Trend`. The scales can be manipulated by using the dialog box which appears after double clicking on a scale.

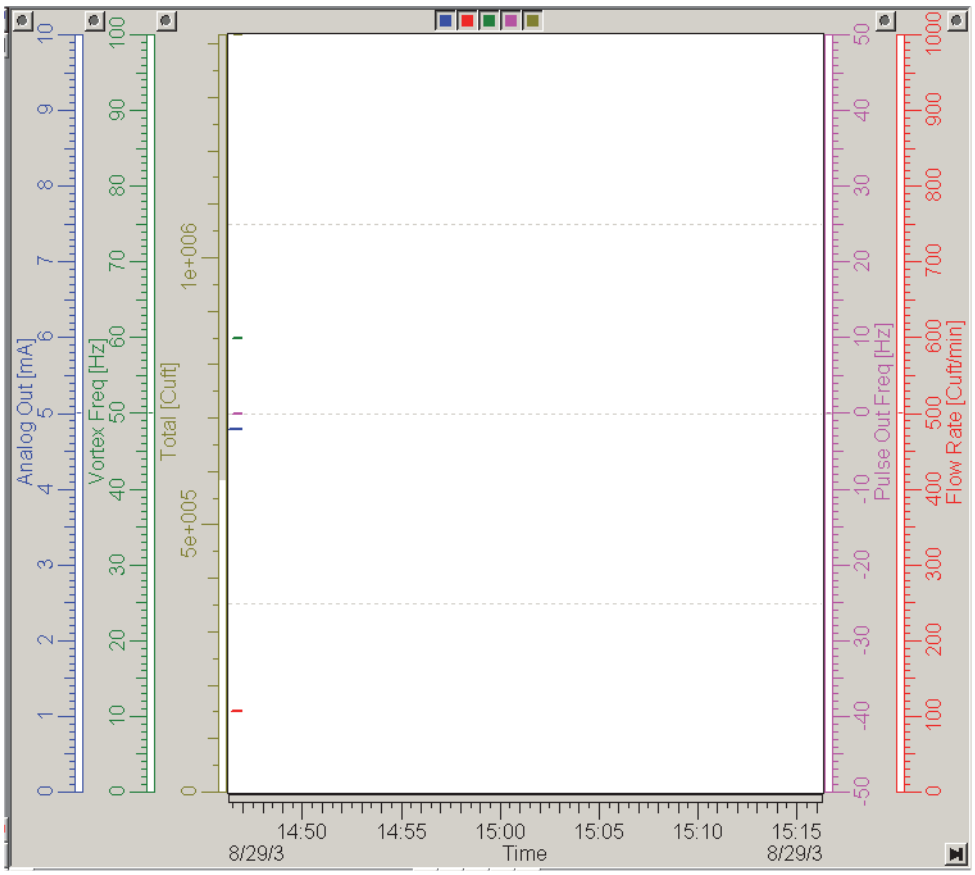

Figure 3. Sample Trend Display

Hotkeys

The Hotkeys function displays those parameters that are of most interest for the devive.The function is accessed via the path `Device > Additional functions > Hotkeys`.

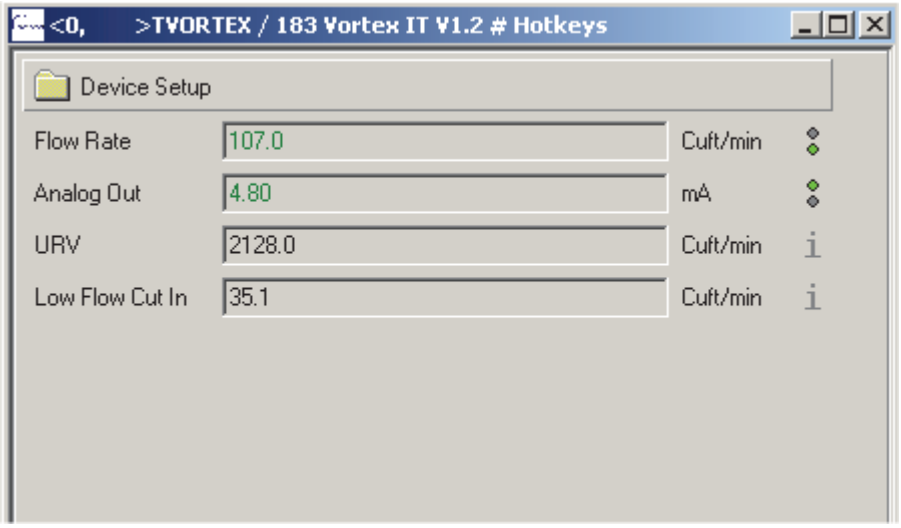

Figure 4. Sample Hotkeys Display

Print

Various reports can be printed. To select the report, follow the path `Device > Additional functions > Print` and then select the report from the choices presented. Then click on the `Print` button to send this report to a printer.

NOTE

When not connected to a device, the printout is the offline parameterization database.

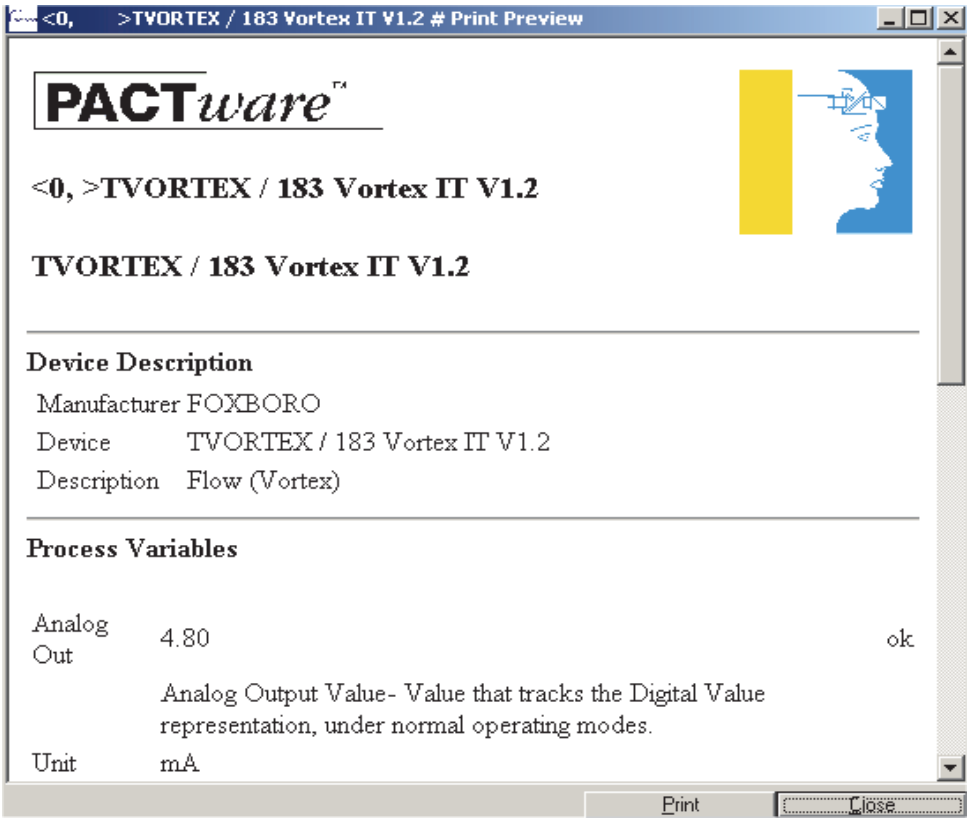

Figure 5. Sample Print Display

Configuration Function

Saving Configuration Changes

When you connect to a device, the data presented is that in the local database of your computer, not necessarily that in your device. Therefore, if you want to make changes to your device database, first upload the data from your device to your computer (`Load from Device`). After making changes, if you `Save`, you are saving the new data in your local database only. If you `Save` and then `Store to Device`, you are saving the data both to your local database and your device.

⚠ CAUTION

Use of `Save` and `Store to Device` commands before the `Load from Device` command downloads a database to your device that may be completely different than that in the device, potentially causing a process upset.

Therefore, when changing the configuration of a device, perform the following steps:

1. Connect to the device (`Device --> Connect`).
2. Upload data from the device by using `Device --> Load from Device` or using the Load from Device icon.
3. Make your changes.
4. Save the changes to your local database by using `File --> Save` (or `Save As`).
5. Download the changes to your device by using `Device --> Store to Device` or using the Store to Device icon.

Entering Tag Numbers

The tag number is the means of identifying a particular instrument. When entering a tag number, do **not** use special characters such as >, <, -, +, :, ;, or *.

Menu Presentation

PC50 presents each group of choices as a screen display. Sometimes the display is a group of folders which, when you pick one, may lead to a subsequent folder or to a menu of choices. In order to show the relationship between these selections, subsequent chapters of this document show a menu tree presentation rather than individual screen displays.

The following example shows a portion of a menu tree and the screen displays that it represents. Folders in the menu tree are shown as shaded.

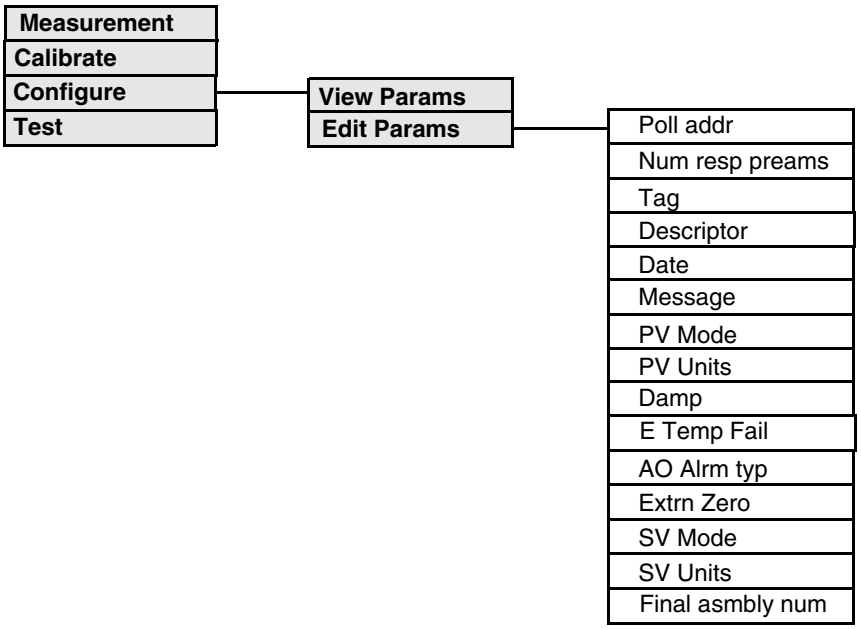

Figure 6. Menu Tree Example

The main display in this example contains four folders: Measurement, Calibrate, Configure, and Test. The screen display is:

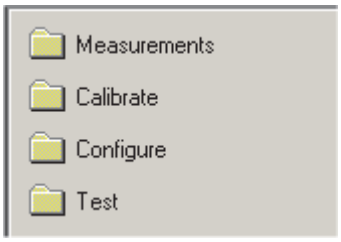

Figure 7. Main Display Screen

By clicking on the `Configure` folder, the following screen is displayed

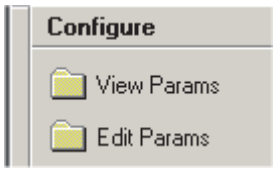

Figure 8. Configure Display

By clicking on the `Edit Params` folder, the following screen is displayed.

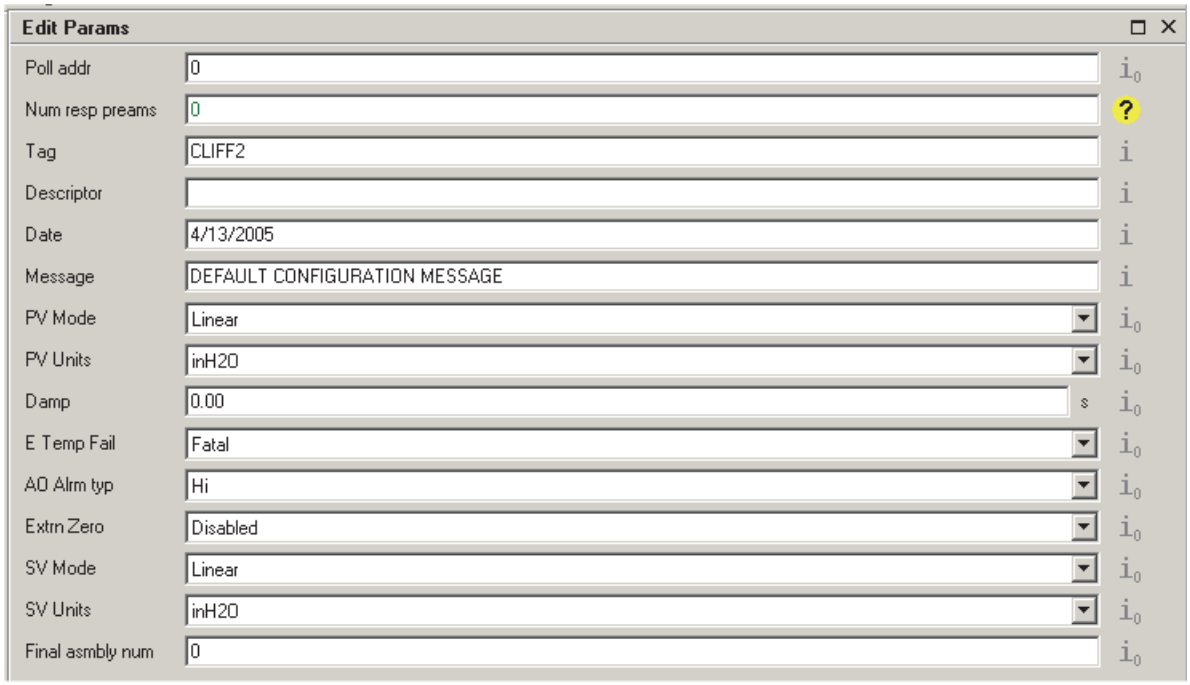

Figure 9. Editable Parameters Display

2. I/A Series Pressure Transmitters

This chapter provides information that is exclusive to using the PC50 Field Device Tool with I/A Series® Pressure Transmitters with HART® communication protocol. Additional information about the transmitters and HART communication is contained in Table 1.

Table 1. Reference Documents

Document	Description
HART Communication	
MAN 4250	HART Communicator Product Manual
MI 020-366	Operation Using a HART Communicator
Transmitter Information	
MI IDP10-T	IDP10-T Differential Pressure Transmitters
MI IAP10-T/IGP10-T	IAP10-T Absolute Pressure Transmitters and IGP10-T Gauge Pressure Transmitters
MI IAP20-T/IGP20-T	IAP20-T Absolute Pressure Transmitters and IGP20-T Gauge Pressure Transmitters
MI IDP25-T/IDP50-T	IDP25-T and IDP50-T Differential Pressure Transmitters
MI IGP25-T/IGP50-T	IGP25-T and IGP50-T Gauge Pressure Transmitters

Offline Menu Tree

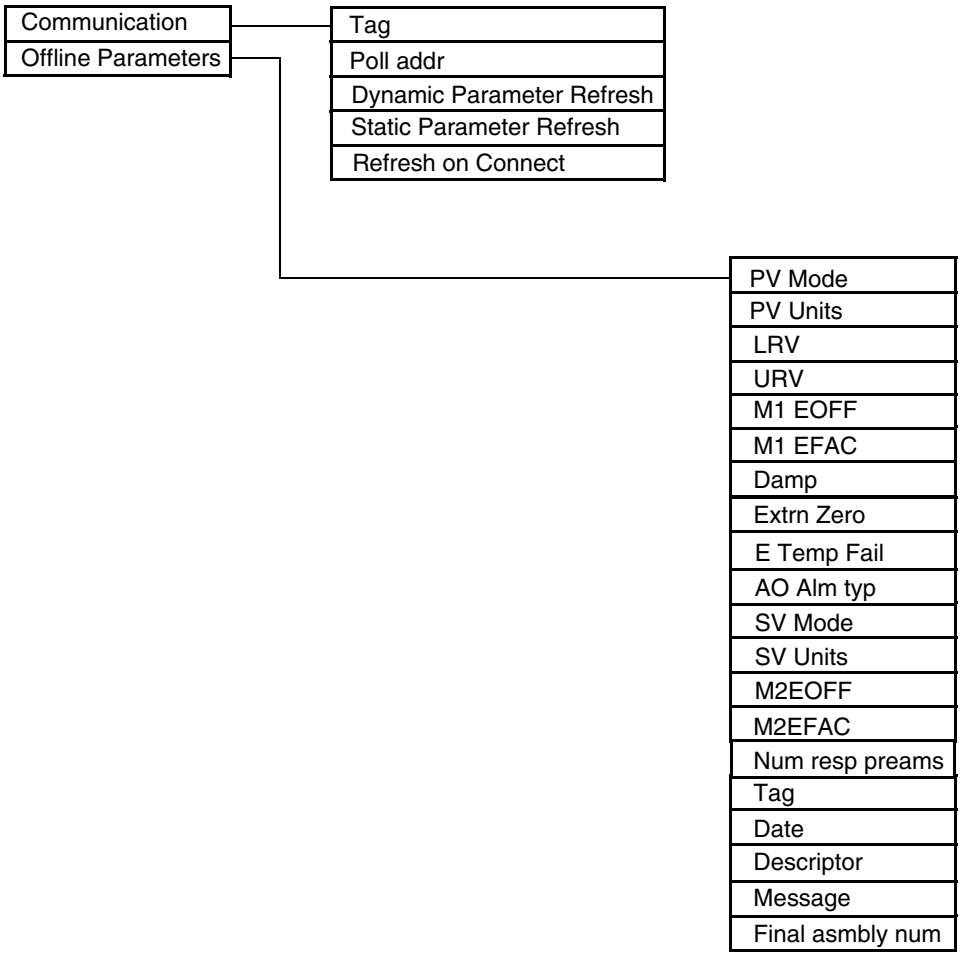

Figure 10. I/A Series Pressure Transmitter Offline Menu Tree

Online Menu Tree

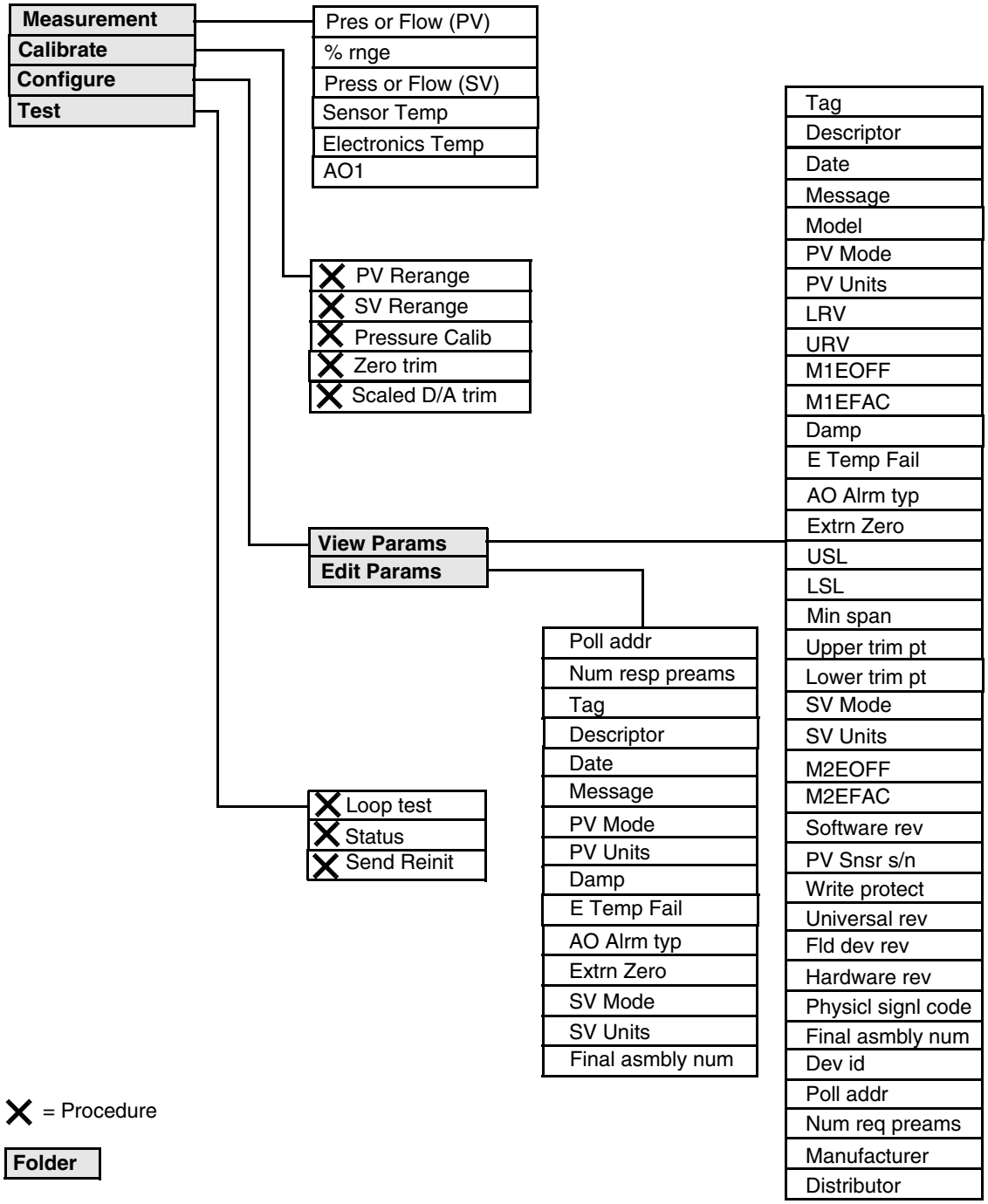

Figure 11. I/A Series Pressure Transmitter Online Menu Tree

Explanation of Parameters

Parameter	Explanation
%Range	Shows the output in percent of range.
AO1	Shows the value of the analog output.
AO Alrm Typ	Analog output failure direction under certain fault conditions - Hi or Lo.
Calibrate	The folder containing calibration parameters.
Configure	The folder containing configuration parameters.
Damp	Output damping (0.0, 0.25, 0.5, 1, 2, 4, 8, 16, or 32 seconds).
Date	Date in the form mm/dd/yyyy.
Descriptor	Normally configured as the Tag Name. The descriptor is limited to 16 characters.
Dev ID	Uniquely identifies the device when combined with the manufacturer identification and device type.
Distributor	The company responsible for the distribution of the device to customers.
Dynamic Parameter Refresh	Timer interval for refresh of dynamic parameters. Specify No Refresh or one of the times provided.
Edit Params	The folder containing editable parameters.
Electronics Temp	Shows the electronics temperature.
E Temp Fail	External temperature failure - Fatal or Nonfatal
Extrn Zero	External zero - Enabled or Disabled.
Final Assembly Num	Number associated with the overall device.
Fld Dev Rev	Revision level of the specific transmitter description.
Hardware Rev	Revision level of the hardware.
Loop Test	Procedure to use the transmitter as a calibration source to check other instruments in the loop.
Lower Trim Pt	Pressure you selected near the LRV for an applied pressure calibration.
LRV	Primary Lower Range Value in PV units.
LSL	Minimum usable value for LRV (Lower Sensor range Limit).
M1 EFAC	Primary Engineering Unit Factor (span in EGU). Editable in square root mode only. The maximum displayed and transmitted flow rate for the Primary Variable (.
M2 EFAC	Secondary Engineering Unit Factor (span in EGU). Editable in square root mode only. The maximum displayed and transmitted flow rate for Secondary Variable (SV).
M1 EOFF	Primary Engineering Unit Offset (0% point in EGU). Editable in linear mode only. The amount of bias or offset in the displayed and transmitted pressure for the Primary variable.
M2 EOFF	Secondary Engineering Unit Offset (0% point in EGU). Editable in linear mode only. The maximum displayed and transmitted flow rate for Secondary Variable (SV).
Manufacturer	Shows the name of the manufacturer.
Measurement	The folder containing measurement readings.
Message	Optional user information. The message is limited to 32 characters and spaces.
Min Span	Smallest allowable difference between the URV and the LRV (lower span limit).
Model	The model number of the device.
Num resp preams	Number of preambles to be sent in a response message from the transmitter to the Host.
Physicl Signl Code	The type of physical layer that has been implemented in the hardware that is responsible for the HART communication port.
Poll Addr	A number from 0 through 15. Nonzero applies to multidrop applications.
Pressure Calib	Calibration procedure using applied pressures.
Pressure or Flow	Shows the value of the primary or secondary variable.

Parameter	Explanation
PV Mode	Primary Variable Mode (Linear, Sqrt cut<1%, or Sqrt lin<4%).
PV Rerange	Procedure to adjust 0 and 100% range values for the Primary Variable.
PV Snsr S/N	Serial number of sensor from which the digital value representation or transmitter variable is primarily derived.
PV Units	Linear: psi, inHg, ftH2O, inH2O, atm, bar, mbar, MPa, Pa, kPa, kg/Sqcm, g/Sqcm, mmHg, torr, or mmH2O. Square Root: gal/s, gal/min, gal/h, gal/d, Mgal/d, Cuft/s, Cuft/min, Cuft/h, Cuft/d, Impgal/s, Impgal/min, Impgal/h, Impgal/d, L/s, L/min, L/h, ML/d, Cum/s, Cum/min, Cum/h, Cum/d, bbl/s, bbl/min, bbl/h, bbl/d, %.
Refresh on Connect	If `No Refresh` is selected, data that was loaded from the device in a previous session is not loaded from the device again. Update of the data is then dependent only on the refresh intervals. If `Refresh Data Set` is selected, all data is loaded from the device
Scaled D/A Trim	Calibration procedure to match the 4-20 mA output to the calibration of the receiving device.
Send REINIT	Procedure to send a command to reinitialize the transmitter.
Sensor Temp	Shows the sensor temperature.
Software Rev	The revision level of the software or firmware that is embedded in the transmitter.
Static Parameter Refresh	Timer interval for refresh of static parameters. Specify No Refresh or one of the times provided.
Status	Procedure to view conditions in the transmitter relating to its hardware, the validity of the variable, its operating status, and internal process.
SV Mode	Secondary Variable Mode (Linear, Sqrt cut<1%, or Sqrt lin<4%).
SV Rerange	Procedure to adjust 0 and 100% range values for the Secondary Variable.
SV Units	Linear: psi, inHg, ftH2O, inH2O, atm, bar, mbar, MPa, Pa, kPa, kg/Sqcm, g/Sqcm, mmHg, torr, or mmH2O. Square Root: gal/s, gal/min, gal/h, gal/d, Mgal/d, Cuft/s, Cuft/min, Cuft/h, Cuft/d, Impgal/s, Impgal/min, Impgal/h, Impgal/d, L/s, L/min, L/h, ML/d, Cum/s, Cum/min, Cum/h, Cum/d, bbl/s, bbl/min, bbl/h, bbl/d, %.
Tag	Normally configured to the plant tag number. The Tag Number is the primary identifier when communicating with a transmitter using the HART Communicator. The tag is limited to eight characters. Do `not` use special characters such as >, <, -, +, :, ;, or *.
Test	The folder containing test parameters.
Universal Rev	Revision level of the Universal Device Description that the transmitter conforms to.
Upper Trim Pt	Pressure you selected near the URV for an applied pressure calibration.
URV	Primary Upper Range Value in PV units.
USL	Maximum usable value for URV (Upper Sensor range Limit).
View Params	The folder containing viewable parameters.
Write Protect	Indicates whether variables can be written to the transmitter or whether commands that cause actions to be performed in the transmitter can or cannot occur.
Zero trim	Calibration procedure to make the sensor input the new zero input reference. Zero trim does not affect span.

Calibration

PV Rerange

This procedure provides reranging (setting of the 0% and 100% range values) of the Primary Variable (PV) without application of pressure. PV Rerange is done in the units configured for the primary variable (PV Unit). It is recommended to configure the mode (PV Mode) to Linear before reranging. Changing PV LRV and PV URV in PV Rerange changes the calibrated range of the transmitter (that is, the pressure values corresponding to the 4 to 20 mA output). Setting a new value for PV LRV has no effect on PV URV and vice versa. Therefore, changing only one of the range values results in a change of span.

In PV Rerange, following the setting of PV LRV and PV URV, there is the opportunity to change M1 EOFF (in Linear Mode) or M1 EFAC (in Square Root Mode).

M1 EOFF sets a bias or offset in the display and digital transmission of the primary variable in Linear Mode. For example, a differential pressure wet leg application requires a calibrated pressure range of -90 to -50 inH_2O for 4 to 20 mA output but you want to bias the range so that the displayed and transmitted range is 20 to 60 inH_2O, representing the actual level in the tank. Use PV Rerange to set PV LRV to -90 inH_2O and PV URV to -50 inH_2O. While still in PV Rerange, set M1 EOFF to the following value:

M1 EOFF = Actual LRV - Displayed/Transmitted 0% Point

M1 EOFF = (–90) – (20) = –110

The result is: Calibrated Range = –90 to –50 inH_2Ospan = 40)

Displayed/Transmitted Range = 20 to 60 inH_2Ospan = 40)

mA Output = 4 to 20 mA

Note that M1 EOFF only sets a bias. The calibrated span and displayed/transmitted span must be equal.

M1 EFAC sets the span of the zero-based display and transmitted digital primary value in Square Root Mode. For example, if you reranged your transmitter to 0 to 100 inH_2O in Linear Mode and you want the display and the digital transmission of the primary variable to be 0 to 750 gal/m, do the following:

1. Put the transmitter in Square Root Mode and select gal/m as your PV Unit.
2. Set the M1 EFAC to the upper range value (that is, 750 gal/m).

Changing PV Rerange changes the calibrated pressure range of the transmitter. Changing M1 EOFF or M1EFAC has no effect on the calibrated pressure range. Therefore, in the example above, changing the M1 EFAC again to 1000 gal/m still leaves the calibrated pressure range at 0 to 100 inH_2O.

SV Rerange

This procedure provides reranging (setting of the 0% and 100% range values) of the Secondary Variable (SV) without application of pressure.

Pressure Calib

Use this procedure if you wish to perform a calibration with applied pressure. Apply a pressure to your transmitter that is near the LRV. Key in that pressure as the pressure for the lower trim point when requested. Similarly, apply a pressure near the URV and key in the pressure for the upper trim point.

I/A Series Intelligent transmitters are factory characterized and calibrated. There is usually no need for the user to do a pressure calibration. The Zero Trim function (described immediately below) can be used to correct for position effects and Reranging (described above) can be used to change the range. Your transmitter uses its factory entered and stored characterization and calibration data to convert any input pressure within range limits to a digital value of pressure which can be transmitted, displayed, and converted into a mA current signal.

However, if a pressure calibration is desired, use the Pressure Calib function to trim the internal digital values of the interpreted pressures based on precise user entered values of the applied lower and upper range pressures.

Also, at times it is desirable to perform a single point calibration (or zeroing) with a nonzero pressure input while not affecting the span. Fox example, to zero an absolute pressure transmitter at a measured atmospheric pressure, use a trim point within the Pressure Calib function to achieve a single point calibration that doesn't change the span.

Zero Trim

This procedure is used for adjusting the Lower Range Value (LRV) to compensate for positioning effects. Set up the calibration equipment per your transmitter Installation MI. See Table 1 for a list of MIs. Zero trim has no effect on the calibrated span.

Scaled D/A Trim

If you are using the 4 to 20 mA output, you may trim the output at 4 mA and 20 mA or at other values by connecting a digital voltmeter and precision resistor in the output loop and adjusting the output with this procedure. Set up the calibration equipment your the transmitter Installation MI. See Table 1 for a list of MIs.

This adjustment has no effect on the internal digital interpretation of pressure or on the displayed and transmitted digital values representing the applied pressures. It only trims the conversion of the digital values of pressure to the transmitted 4 to 20 mA analog signal.

NOTE

It is not necessary to use this procedure unless there is a plant requirement to make the upper, lower, or other calibration values exactly match readings on certain plant calibration equipment and the zero, span or other operations done result in a small but unacceptable difference between the transmitter mA output and the test equipment mA readout values.

3. TI20/RTT20 Temperature Transmitters

This chapter provides information that is exclusive to using the PC50 Field Device Tool with RTT20/TI20 Temperature Transmitters with HART® communication protocol. Additional information about the transmitters and HART communication is contained in Table 2.

Table 2. Reference Documents

Document	Description
HART Communication	
MAN 4250	HART Communicator Product Manual
Transmitter Information	
MI 020-453	RTT20 - Installation, Configuration, Operation, Calibration, and Maintenance
MI 020-460	RTT20 - Operation, Configuration, and Calibration with a HART Communicator
EMT 0111 A	TI20 - Installation, Configuration, Operation, Calibration, and Maintenance

Offline Menu Tree

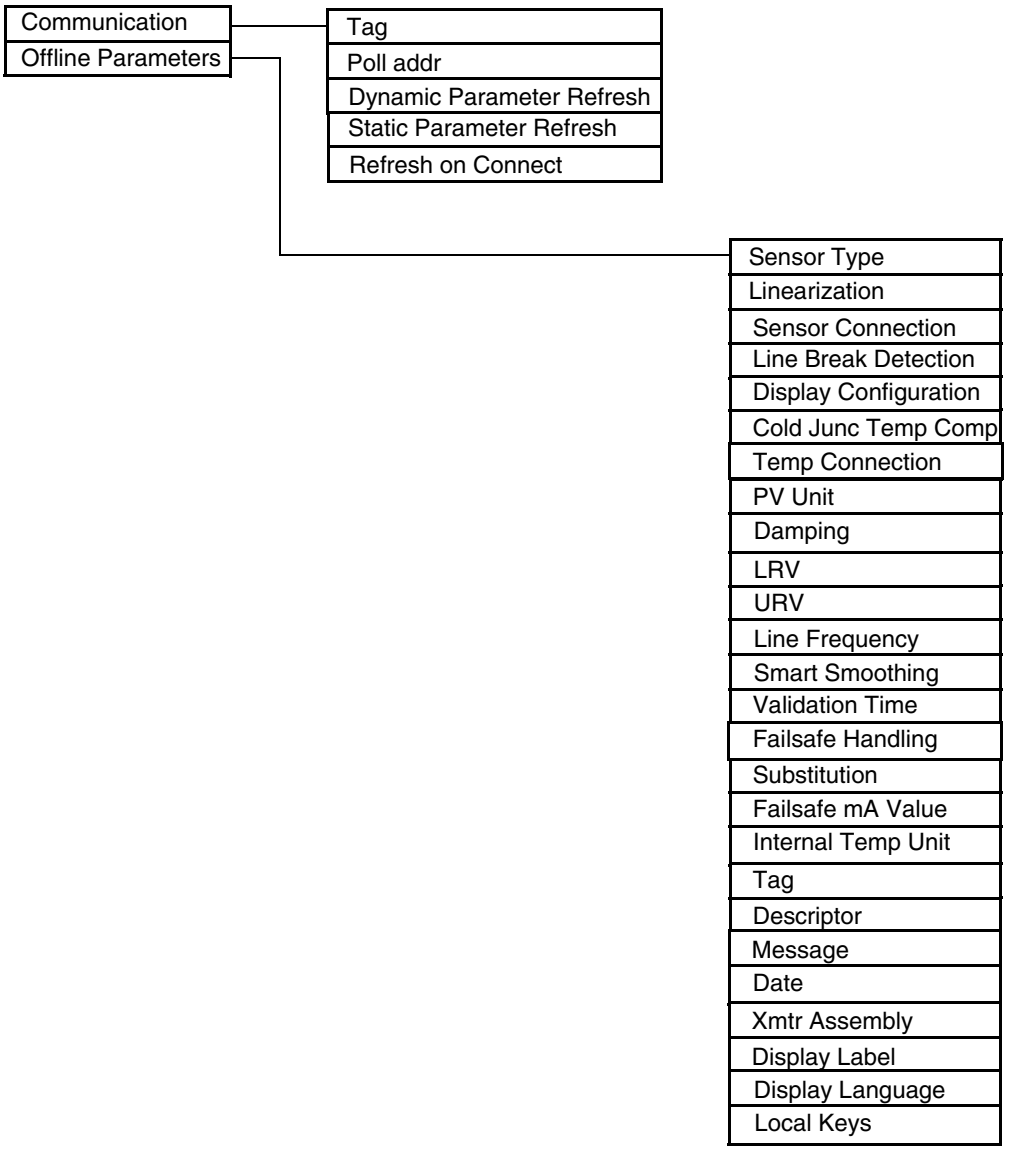

Figure 12. TI20/RTT20 Temperature Transmitter Offline Menu Tree

Online Menu Tree

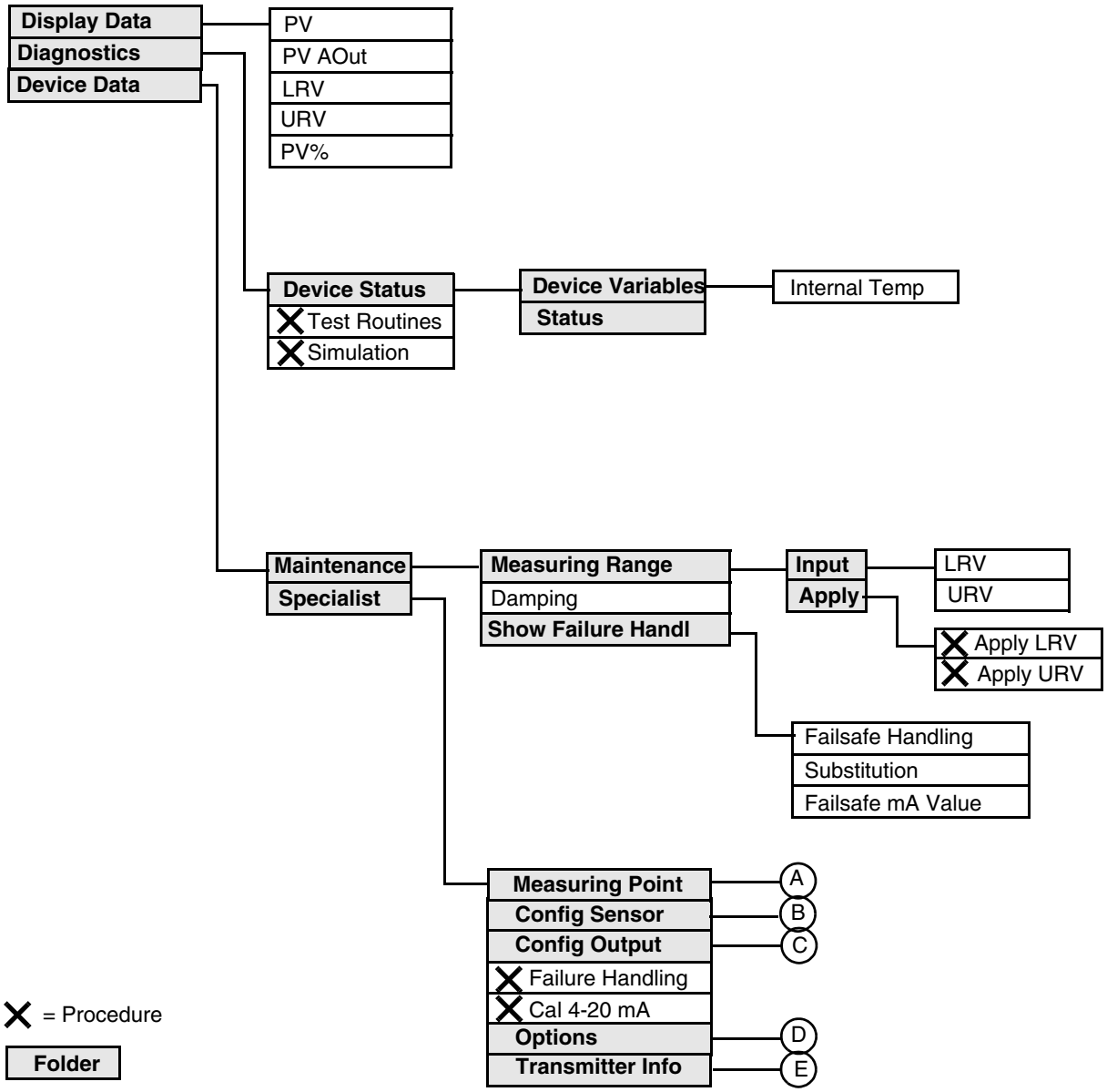

Figure 13. T!20/RTT20 Temperature Transmitter Online Menu Tree (1 of 2)

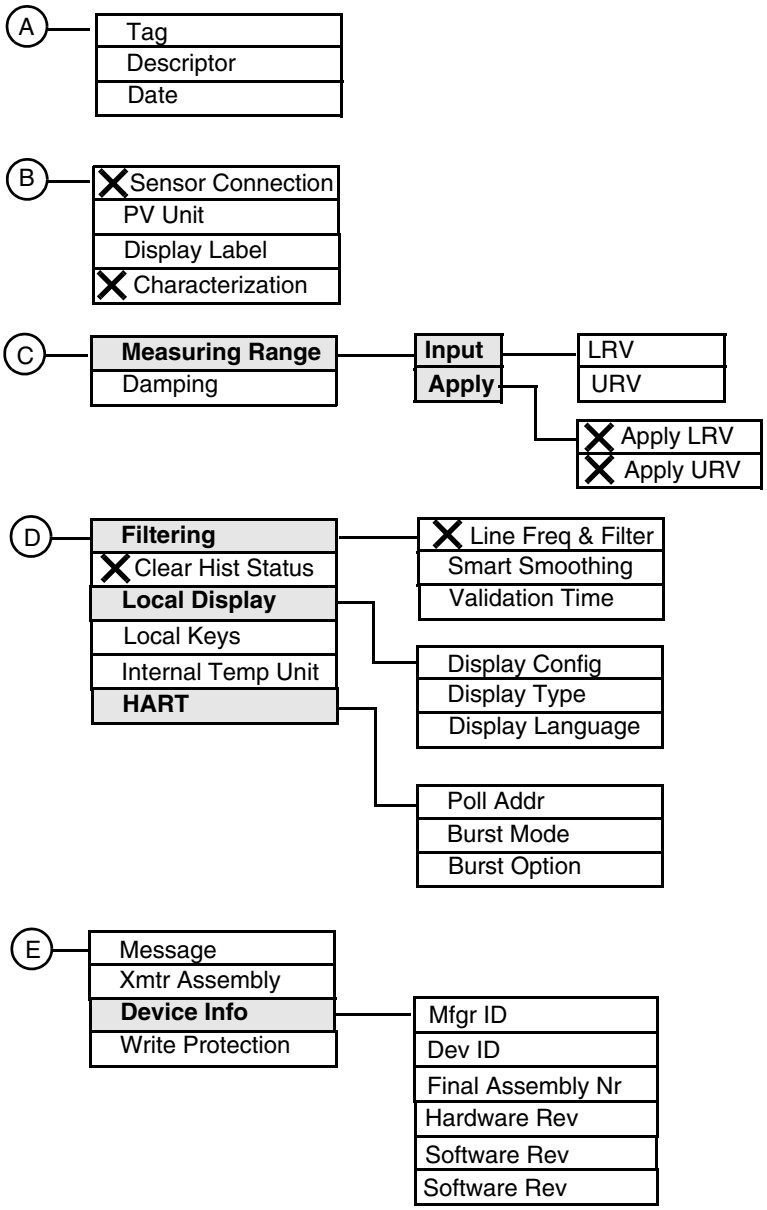

Figure 14. T!20/RTT20 Temperature Transmitter Online Menu Tree (2 of 2)

Explanation of Parameters

Parameter	Explanation
Apply	The folder containing parameters used to perform a calibration
Apply LRV	Procedure to calibrate the lower range value.
Apply URV	Procedure to calibrate the upper range value.
Burst Mode	Specify `On` or `Off`. You must specify `Off` with multidrop wiring.
Burst Option	Select `PV, % range/current`, or `process vars/crnt`.
Cal 4-20 mA	Procedure to trim the 4 and 20 mA output. See MI 020-453.
Characterization	Procedure to specify the number of points on the curve between 2 and 22 and their coordinates.
Clear Hist Status	Procedure to clear the historical status.
Config Output	The folder containing the output configuration parameters.
Config Sensor	The folder containing the sensor configuration parameters.
Damping	In configuring the output, damping can be specified between 0 and 30 seconds. It is recommended to increase the `Smart Smoothing` and/or `Validation Time` before increasing the damping value.
Date	Enter the date in the form mm/dd/yyyy.
Descriptor	The description of the transmitter, usually the tag name.
Device Data	The folder containing maintenance and configuration parameters.
Dev ID	Shows the device identification.
Device Status	The folder containing device status parameters.
Device Variables	The folder containing the internal temperature parameter.
Diagnostics	The folder containing the diagnostic parameters.
Display Config	Specify the reading on the optional local display as `Display PV, Display % of Range, Display AOut in mA, Alternate PV/AOut,` and `Alternate PV/%`.
Display Data	The folder containing measurement readings.
Display Label	Enter the label for the third line of the optional display (7 characters maximum).
Display Language	Specify the language of the local display (`English`, `French`, `German`, or `Spanish`).
Display Type	Shows the type of local display (1-line, 3-line, or none).
Dynamic Parameter Refresh	Specify No Refresh or after one of the times provided.
Failsafe Handling	In Offline, specify failsafe handling as `On` or `Off`. In Online, shows if failsafe handling is on or off.
Failsafe mA Value	Shows the mA output value under failure conditions.
Failure Handling	Procedure to specify the sensor fault detection feature as `On` or `Off`.
Filtering	The folder containing filtering parameters.
Final Assembly Nr	Shows the device final assembly number.
Hardware Rev	Shows the hardware revision level.
HART	The folder containing the HART communication parameters.
Input	The folder containing parameters used to rerange the transmitter without calibration equipment.
Internal Temp Unit	Specify the cold junction compensation units as `degC` or `degF`.
Internal Temperature	Shows the cold junction compensation temperature.
Line Freq and Filter	Procedure to specify the ac frequency of the power supply (50 or 60 Hz) and the ability to minimize noise from the power supply. Specify `High Filter` unless you require an extremely fast response with damping set for 0 seconds. In that case, specify `High Speed.`
Local Display	The folder containing local display parameters.
Local Keys	Allows you to `Enable` or `Disable` keys on the optional local display.

Parameter	Explanation
LRV	In Display Data, shows the Lower Range Value. In Input, enter the Lower Range Value.
Maintenance	The folder containing maintenance parameters.
Measuring Point	The folder containing the tag, descriptor, and date.
Measuring Range	The folder containing parameters to rerange or calibrate the transmitter.
Message	Optional user information. The message is limited to 32 characters and spaces.
Mfgr ID	Shows the name of the manufacturer.
Options	The folder containing option parameters.
Poll Address	Specify 0 for operation in the standard point to point, 2-wire, 4 to 20 mA mode. Specify an address from 1 through 15 for multidrop operation.
PV	Shows the value of the process variable.
PV%	Shows the process variable in percent of range.
PV AOut	Shows the analog output of the process variable.
PV Unit	The process variable (ohm, mV, degF, degC, degR, Kelvin)
Refresh on Connect	Specify No Refresh or Refresh Data Set.
Sensor Connection	Procedure to specify the sensor (type of thermocouple, type of RTD, ohm, or mV).
Show Failure Handl	The folder containing failsafe parameters.
Simulation	Procedure to use the transmitter as a mA calibration source.
Smart Smoothing	Process or electrical noise is minimized by a digital filtering algorithm and is smoothed by averaging the input over an adjustable time period. Specify the time period from 0 to 30 seconds.
Software Rev	Shows the software revision level.
Specialist	The folder containing configuration parameters.
Static Parameter Refresh	Specify No Refresh or after one of the times provided.
Status	Shows the status of the device.
Substitution	Shows the mA output to be set upon failsafe (Hold Last Val/Auto, Hold Last Val/Latch, Failsafe Val/Auto, or Failsafe Val/Latch).
Tag	The primary identifier when communicating with a transmitter. Do **not** use special characters such as >, <, -, +, :, ;, or *.
Test Routines	Procedure to perform internal test routines.
Transmitter Info	The folder containing transmitter information.
Universal Rev	Shows the universal command set revision level.
URV	In Display Data, shows the Upper Range Value. In Input, enter the Upper Range Value.
Validation Time	Specify the lag time that the microprocessor holds and compares in input to past inputs. This is adjustable from 0 to 10 seconds.
Write Protection	Shows whether write protection is enabled.

4. IMT25 Magnetic Flow Transmitters

This chapter provides information that is exclusive to using the PC50 Field Device Tool with IMT25 Magnetic Flow Transmitters with HART® communication protocol. Additional information about the transmitters and HART communication is contained in Table 3.

Table 3. Reference Documents

Document	Description
HART Communication	
MAN 4250	HART Communicator Product Manual
Transmitter Information	
MI 021-397	Operation, Configuration, and Calibration with a HART Communicator
MI 021-398	Operation, Configuration, and Calibration from Local Keypad/Display

Offline Menu Tree

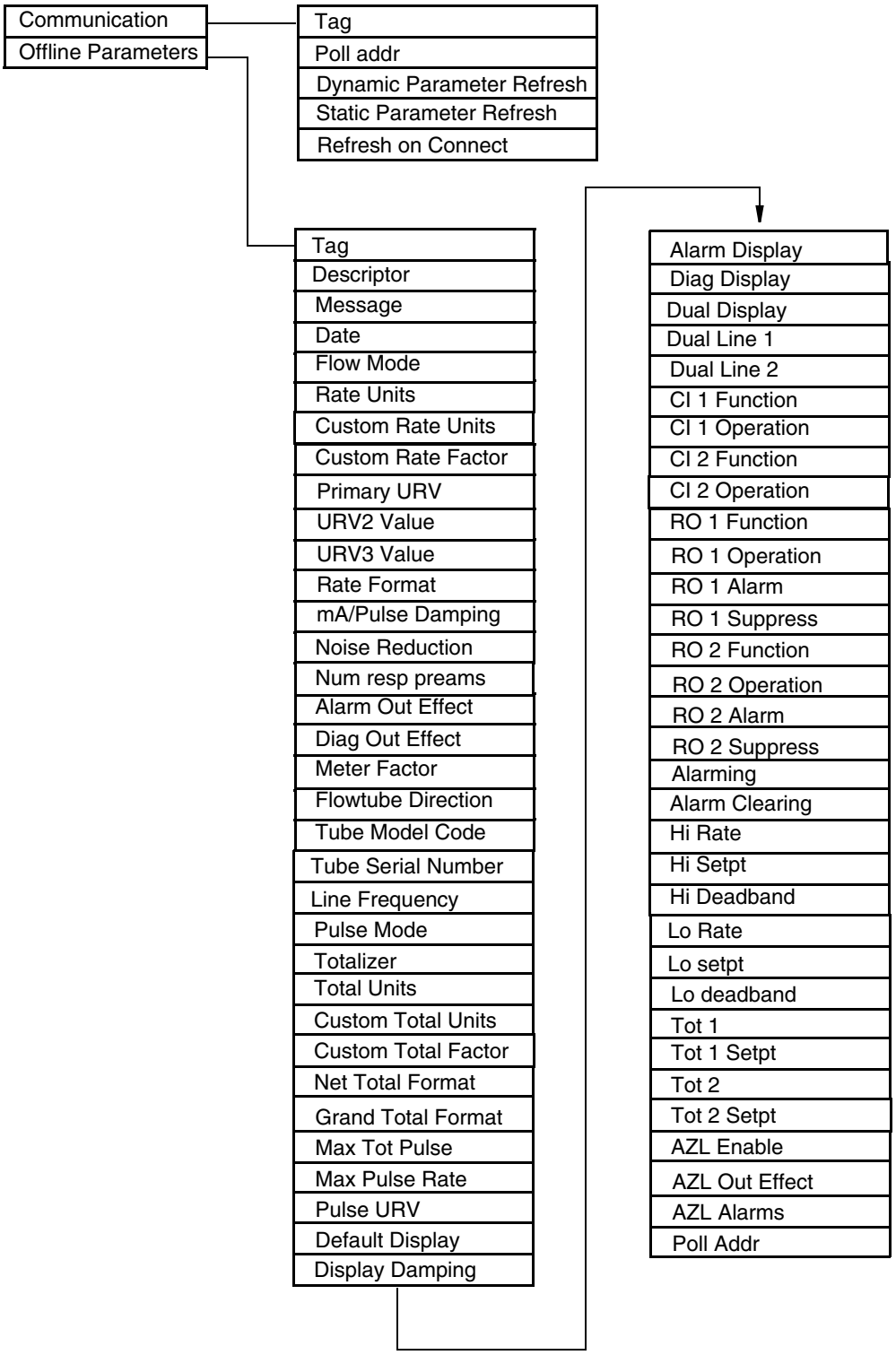

Figure 15. IMT25 Magnetic Flow Transmitters Offline Menu Tree

Online Menu Tree

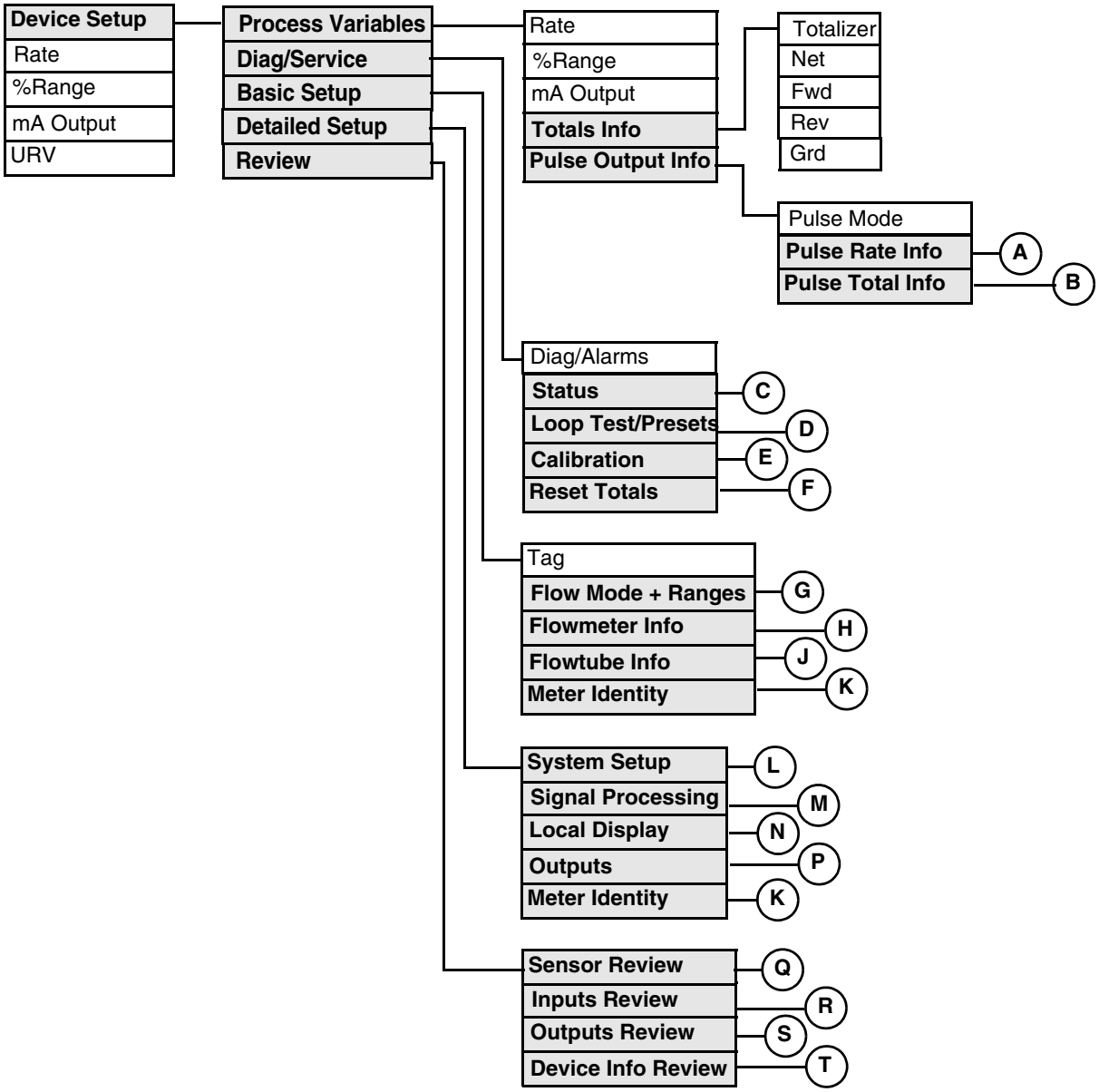

✕ = Procedure

Folder

Figure 16. IMT25 Magnetic Flow Transmitter Online Menu Tree (1 of 6)

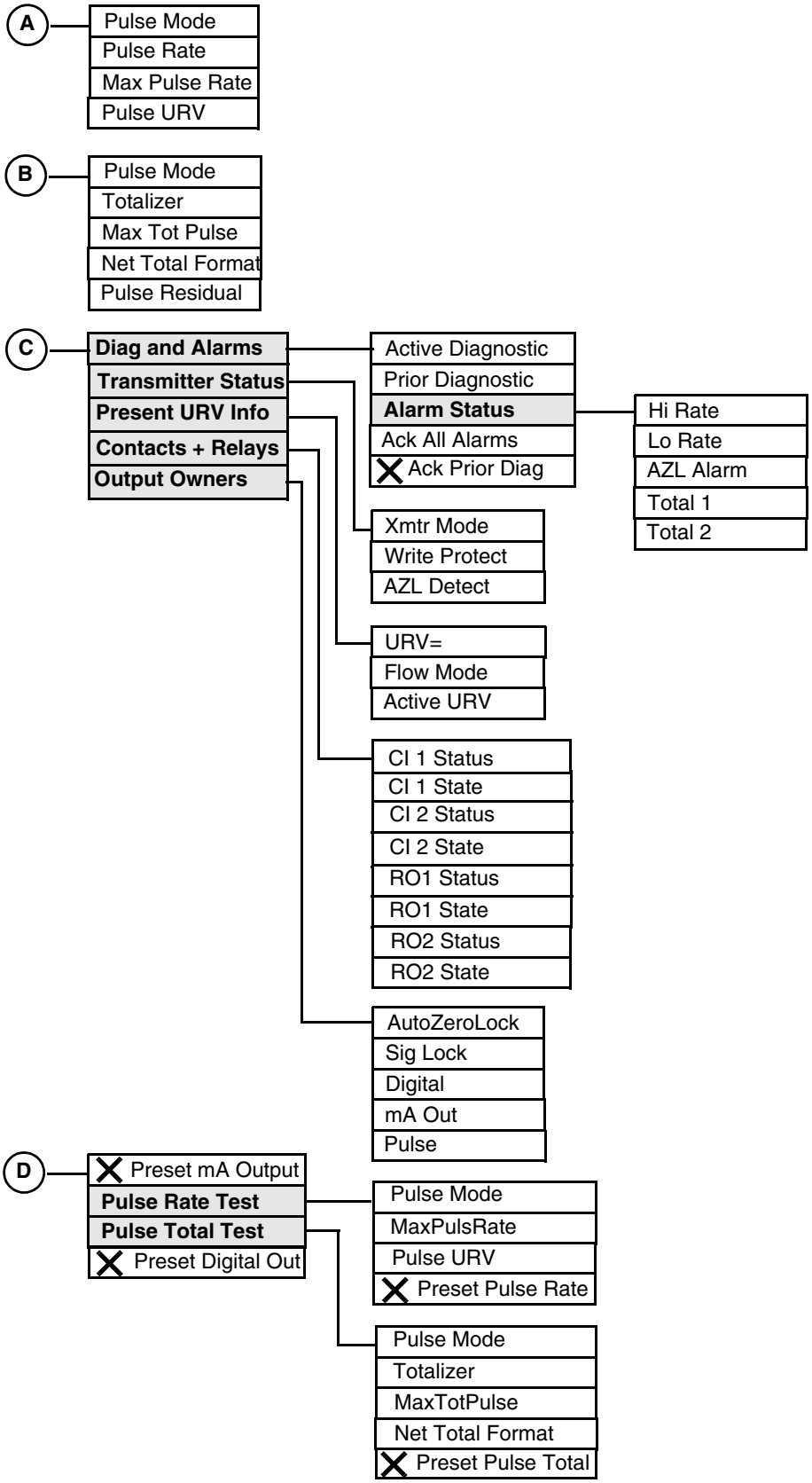

Figure 17. IMT25 Magnetic Flow Transmitter Online Menu Tree (2 of 6)

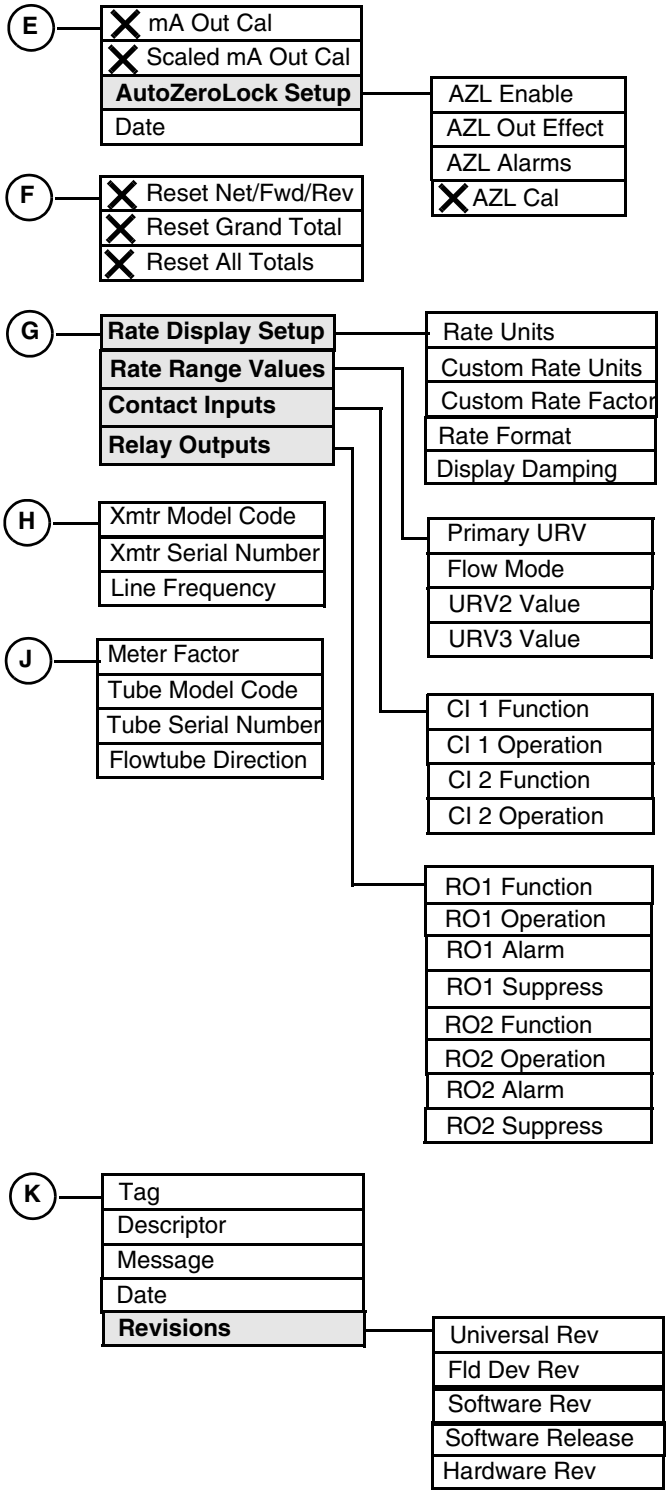

Figure 18. IMT25 Magnetic Flow Transmitter Online Menu Tree (3 of 6)

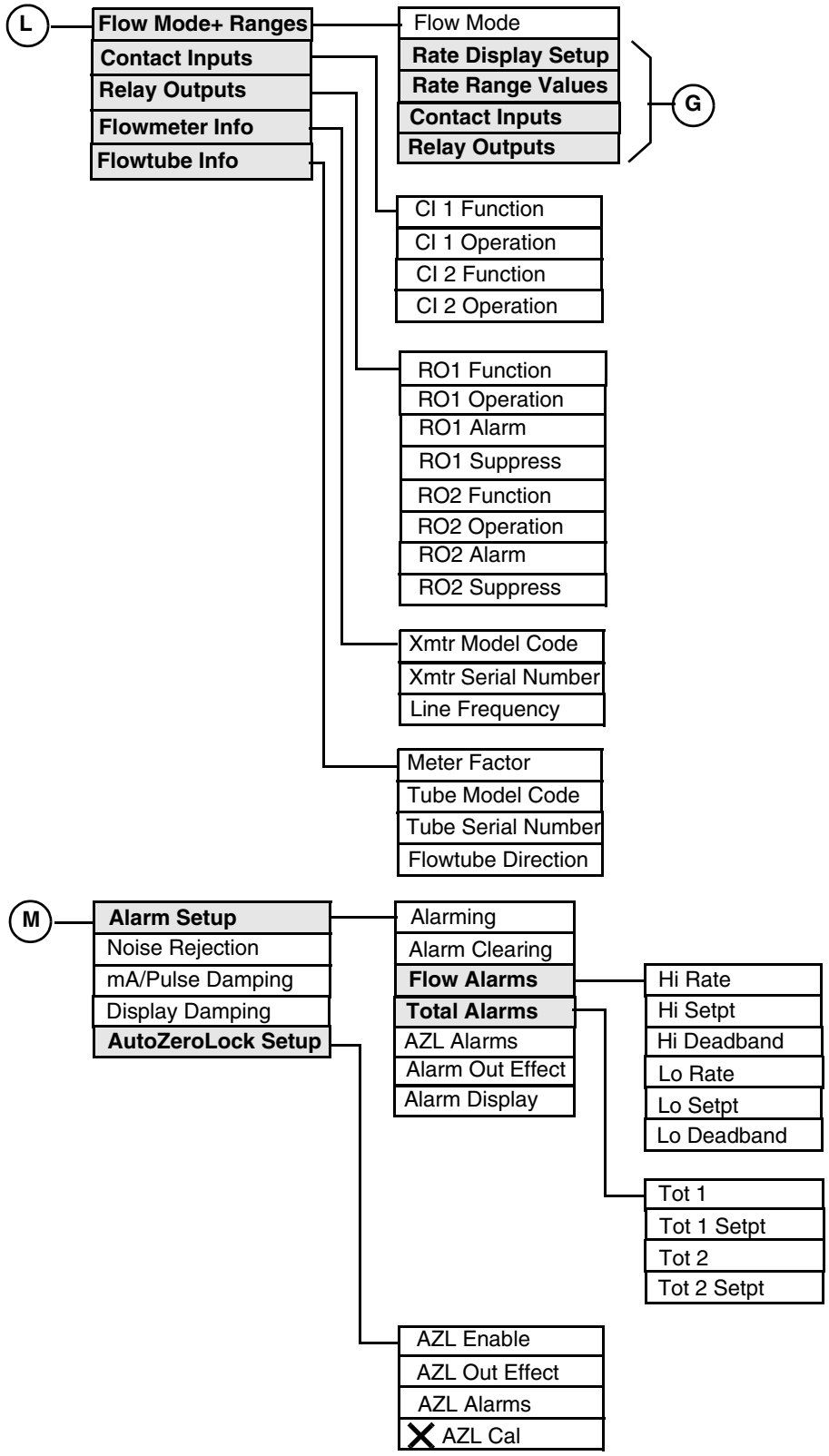

Figure 19. IMT25 Magnetic Flow Transmitter Online Menu Tree (4 of 6)

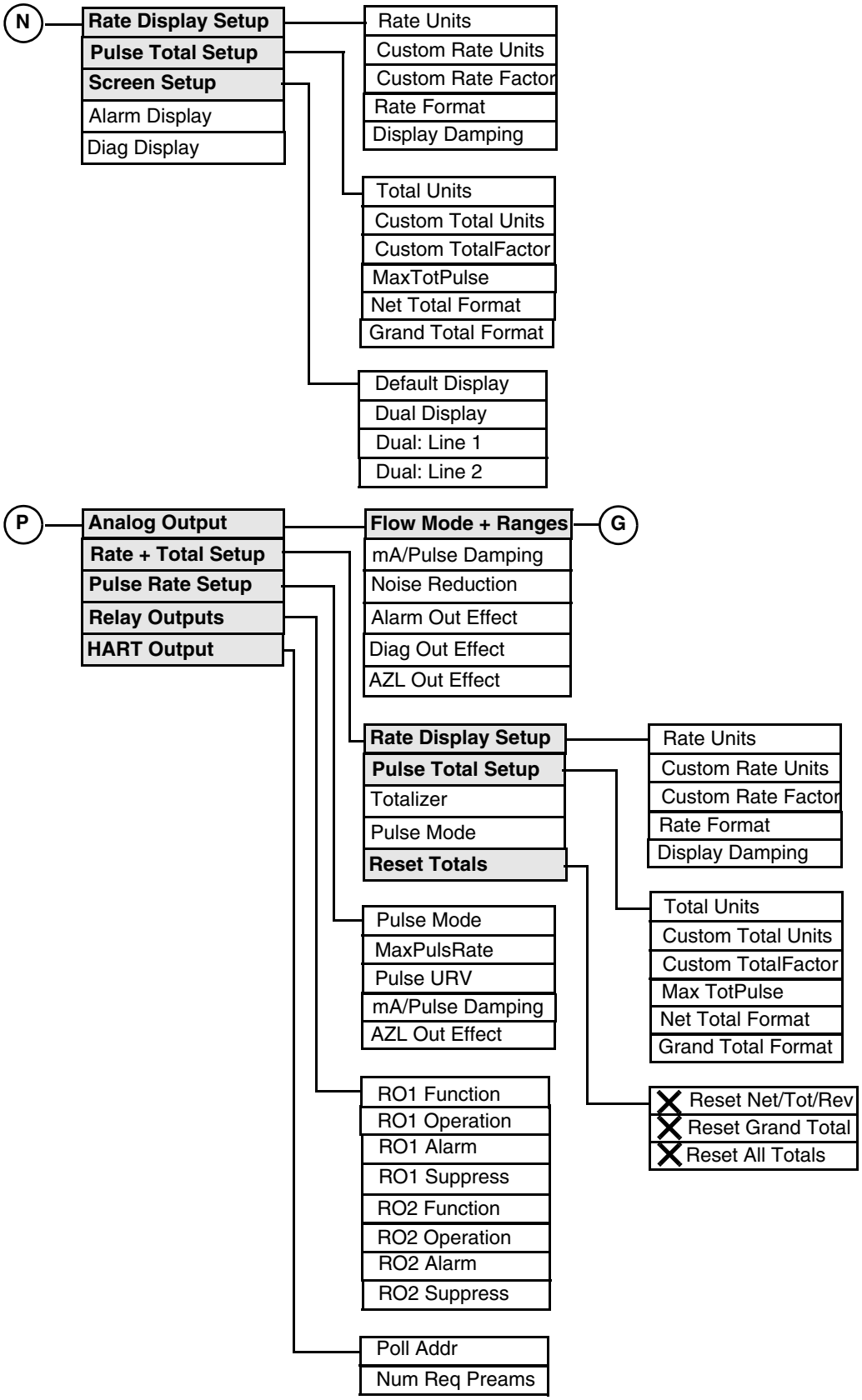

Figure 20. IMT25 Magnetic Flow Transmitter Online Menu Tree (5 of 6)

Q

- Xmtr Model Code
- Xmtr Serial Number
- Line Frequency
- Tube Model Code
- Tube Serial Number
- Meter Factor
- Flow Mode
- Flowtube Direction
- Alarming
- Alarm Clearing
- AZL Alarms
- Hi Rate
- Hi Setup
- Hi Deadband
- Lo Rate
- Lo Setup
- Lo Deadband
- Tot 1
- Tot 1 Setpt
- Tot 2
- Tot 2 Setpt

R

- Rate Units
- Custom Rate Units
- Custom Rate Factor
- Primary URV
- URV2 Value
- URV3 Value
- Pulse URV
- CI 1 Function
- CI 1 Operation
- CI 2 Function
- CI 2 Operation

S

- mA/Pulse Damping
- Noise Reduction
- Alarm Out Effect
- Diag Out Effect
- AZL Enable
- AZL Out Effect
- AZL Alarms
- Totalizer
- Pulse Mode
- Total Units
- Custom Total Units
- Custom Total Factor
- Net Total Format
- Grand Total Format
- Rate Format
- Poll Addr
- Num Req Preams
- Display Damping
- Default Display
- Dual Display
- Dual: Line 1
- Dual: Line 2
- Alarm Display
- Diag Display
- RO1 Function
- RO1 Operation
- RO1 Alarm
- RO1 Suppress
- RO2 Function
- RO2 Operation
- RO2 Alarm
- RO2 Suppress

T

- Manufacturer
- Dev ID
- Tag
- Descriptor
- Message
- Date
- Universal Rev
- Fld Dev Rev
- Software Rev
- Software Release
- Hardware Rev

Figure 21. IMT25 Magnetic Flow Transmitter Online Menu Tree (6 of 6)

Explanation of Parameters

Parameter	Explanation
ACK All Alarms	Procedure to acknowledge all alarms.
ACK Prior Diag	Procedure to acknowledge prior diagnostic conditions.
Active Diagnostic	Shows the active diagnostic condition, if any.
Alarm Clearing	Specify if alarms are to be cleared automatically (`Auto Ack`) or manually (`Manual Ack Only`).
Active URV	In Preset URV info, shows which is the active URV.
Alarm Clearing	Specify `Auto Ack` or `Manual Ack Only`.
Alarm Display	Specify if the display is to `Blink` or `Don't Blink` when an alarm condition occurs.
Alarm Out Effect	Specify the effect of an alarm on the output as `No Effect`, `Go Upscale`, or `Go Downscale`.
Alarming	Specify if the alarming feature is to be `Enabled` or `Disabled`.
Alarm Setup	The folder containing alarm setup parameters.
Alarm Status	The folder containing alarm status information.
Analog Output	The folder containing analog output parameters.
AutoZeroLock	Shows if AZL is in control of the outputs (`Yes` = active, `No` = inactive, `No Effect` = not configured.
AutoZeroLock Setup	The folder containing AZL parameters.
AZL Alarm	In Alarm Status, shows if any AZL alarms exist or existed.
AZL Alarms	Specify if AZL alarms are `On` or `Off`.
AZL Cal	Procedure to calculate the AZL setpt.
AZL Enable	Specify if a AZL detection feature is `On` or `Off`.
AZL Detect	Shows the status of the AZL detector (`Active` = triggered, `Inactive` = not triggered, `Off` = not configured, or `Needs Cal`.
AZL Out Effect	If AZL is enabled, specify effect as `None` or `Auto Signal Lock`.
Basic Setup	The folder containing basic setup parameters.
Calibration	The folder containing calibration parameters.
CI 1 Function	Specify the function of CI 1 as `Off`, `Ack Alarms`, `Reset Net Total`, `Reset Grand Total`, `Reset All Totals`, `Multirange Select`, or `Signal Lock`.
CI 1 Operation	If CI 1 Function is not Off, specify the operation of CI 1 as `Normally Open` or `Normally Closed`.
CI 1 State	Shows the state of CI 1 as open or closed.
CI 1 Status	Shows the status of CI 1.
CI 2 Function	Similar to CI 1 Function.
CI 2 Operation	Similar to CI 1 Operation.
CI 2 State	Shows the state of CI 2 as open or closed.
CI 2 Status	Shows the status of CI 2.
Contact Inputs	The folder containing contact input parameters.
Contacts + Relays	The folder containing contact and relay information.
Custom Rate Factor	If custom rate units are used, specify the custom slope.
Custom Rate Units	If custom rate units are used, specify the units in 6 alphanumeric characters maximum.
Custom Total Factor	If custom total units are used, specify the custom slope.
Custom Total Units	If custom total units are used, specify the units in 6 alphanumeric characters maximum.

Parameter	Explanation
Date	Enter the date in the form mm/dd/yyyy.
Default Display	Specify the default display as `Rate EGU`, `Rate %Range`, `Fwd Total`, `Rev Total`, `Net Total`, `Grand Total`, or `Dual Display`.
Descriptor	Enter the description of the transmitter. This is optional.
Detailed Setup	The folder containing detailed setup parameters.
Device Info Review	The folder containing a review of device info parameters.
Device Setup	The folder leading to all parameters.
Diag/Alarms	Shows whether diagnostic or alarm conditions exist.
Diag and Alarms	The folder containing the status of alarm and diagnostic conditions.
Diag Display	Specify if the display is to `Blink` or `Don't Blink` when a diagnostic condition occurs.
Diag Out Effect	Specify the effect of a diagnostic condition on the output as `Go Upscale`, or `Go Downscale`.
Diag/Service	The folder containing status, calibration, and reset totals parameters.
Digital	Shows if the output value is live (`Normal`) or is controlled by another function or condition.
Display Damping	Enter the damping response time for the local display between 0.00 and 99.9 seconds.
Dual Display	Specify the dual display feature as `On` or `Off`.
Dual Line 1	If Dual Display is on, specify Line 1 as `Rate EGU`, `Rate %Range`, `Fwd Total`, `Rev Total`, `Net Total`, or `Grand Total`.
Dual Line 2	Similar to Dual Line 1.
Dynamic Parameter Refresh	Timer interval for refresh of dynamic parameters. Specify No Refresh or one of the times provided.
Fld Dev Rev	Shows the field device revision level.
Flow Alarms	The folder containing flow alarm parameters.
Flowmeter Info	The folder containing flowmeter parameters.
Flow Mode	In Present URV Info, shows the type of flow mode. In Setup, specify the mode as `Unidir Single Range`, `Unidir Multirange`, `Bidir Dual Range`, or `Bidir Split Range`.
Flow Mode + Ranges	The folder containing flow mode and range parameters.
Flowtube Direction	Specify the flow direction as `Unidir Positive`, `Unidir Reverse`, `Bidir Positive`, or `Bidir Reverse`.
Flowtube Info	The folder containing flowtube parameters.
Fwd	Shows the forward flow total.
Grd	Shows the grand flow total (forward minus reverse flow since the last reset of grand total).
Grand Total Format	If the totalizer is used, specify the grand total format from the picklist presented.
Hardware Rev	Shows the hardware release level.
HART Outputs	The folder containing HART output parameters.
Hi Deadband	If Hi Rate is Enabled, enter the deadband.
Hi Rate	In Alarm Status, shows if any high rate alarms exist or existed. In Alarm Setup, specify if a high flow rate alarm is `Enabled` or `Disabled.`
Hi Setpt	If Hi Rate is Enabled, enter the set point.
Inputs Review	The folder containing a review of input parameters.
Line Frequency	Specify the ac frequency as `50 Hz` or `60 Hz`.
Local Display	The folder containing local display parameters.
Lo Deadband	If Lo Rate is Enabled, enter the deadband.
Loop Test/Presets	The folder containing loop test and preset parameters.

Parameter	Explanation
Lo Rate	In Alarm Status, shows if any low rate alarms exist or existed. In Alarm Setup, specify if a low flow rate alarm is `Enabled` or `Disabled.`
Lo Setpt	If Lo Rate is Enabled, enter the set point.
mA Out	Shows if the output value is live (`Normal`) or is controlled by another function or condition.
mA Out Cal	Procedure to match the mA output of the transmitter to the output of a specific receiving device.
mA Output	If analog output, shows the output in mA.
mA/Pulse Damping	Specify the damping response time from 0.0 to 99.9 seconds.
Max Pulse Rate	In Pulse Rate Info, shows the maximum pulse rate frequency. In Pulse Rate Setup or Pulse Rate Test, specify the maximum pulse rate frequency as `1 kHz`, `2 kHz`, `5 kHz`, or `10 kHz`.
Max Tot Pulse	In Pulse Total Info, shows the pulse rate specified for full scale flow. In Pulse Total Test, specify the maximum total pulse frequency as `10 Hz` or `100 Hz`.
Message	Enter optional user information. The message is limited to 32 characters and spaces.
Meter Factor	Enter the meter factor of the flowtube.
Meter Identity	The folder containing flowmeter identity parameters.
Net	Shows the net flow total (forward minus reverse flow).
Net Total Format	In Pulse Total Info, shows the net total format. In Pulse Total Test, specify the net total format from the picklist presented.
Noise Reduction	Specify the noise reduction feature as `On` or `Off`.
Output Owners	The folder containing output effect information.
Num Req Preams	Shows the number of preambles to be sent in a response message from the transmitter to the Host.
Outputs Review	The folder containing a review of output parameters.
Outputs	The folder containing output parameters.
Poll Addr	Specify 0 for operation in the standard point to point, 4 to 20 mA mode. Specify an address from 1 through 15 for multidrop operation.
Preset Digital Out	Procedure to enter the desired HART digital flow rate output.
Preset mA Output	Procedure to enter the desired mA output between 3.8 and 21.0 mA.
Preset Pulse Rate	Procedure to preset the pulse rate.
Preset Pulse Total	Procedure to preset the pulse total.
Present URV Info	The folder containing Present URV information.
Primary URV	Enter the primary upper range value.
Prior Diagnostic	Shows the prior diagnostic condition, if any.
Process Variables	The folder containing the process variable parameters.
Pulse	Shows if the output value is live (`Normal`) or is controlled by another function or condition.
Pulse Mode	In Pulse Rate Info or Pulse Total Info, shows the state of the pulse rate. In Rate + Pulse Setup or Pulse Rate Setup, specify the pulse mode as `Off`, `Rate`, or `Total`. In Pulse Rate Test, specify `Off` or `Rate`. In Pulse Total Test, specify `Off` or `Total`.
Pulse Output Info	The folder containing pulse output information.
Pulse Rate	If Pulse Mode is set to Rate, shows the pulse rate.
Pulse Rate Info	The folder containing pulse rate information
Pulse Rate Setup	The folder containing pulse rate setup parameters.
Pulse Rate Test	The folder containing pulse rate test parameters.
Pulse Residual	Shows the fraction of a total pulse that has accumulated in % pulse.
Pulse Total Info	The folder containing pulse total information.

Parameter	Explanation
Pulse Total Setup	The folder containing pulse total setup parameters.
Pulse Total Test	The folder containing pulse total test parameters.
Pulse URV	In Pulse Rate Info, shows the flow rate that yields the max pulse rate. In Pulse Rate Setup or Pulse Rate Test, enter the Pulse URV.
Rate	Shows the rate in units specified.
Rate + Pulse Setup	The folder containing rate and pulse setup parameters.
Rate Display Setup	The folder containing rate display setup parameters.
Rate Format	Specify the rate format from the picklist presented.
Rate Range Values	The folder containing rate range parameters.
Rate Units	Specify units from the picklist presented.
Refresh on Connect	If `No Refresh` is selected, data that was loaded from the device in a previous session is not loaded from the device again. Update of the data is then dependent only on the refresh intervals. If `Refresh Data Set` is selected, all data is loaded from the device
Relay Outputs	The folder containing relay output parameters.
Reset All Totals	Procedure to reset all totals.
Reset Grand Total	Procedure to reset the grand total.
Reset Net/Fwd/Rev	Procedure to reset the forward, reverse, and net totals.
Reset Totals	The folder containing parameters to reset various totals.
Rev	Shows the reverse flow total.
Review	The folder containing a review of sensor, inputs, outputs, and device info parameters.
Revisions	The folder containing various revision level parameters.
RO 1 Alarm	If RO 1 Function is not Off, specify the alarm of RO 1 as `High Rate`, `Low Rate`, `High Fwd Total 1`, `High Fwd Total 2`, `AZL Detect`, or `Any Alarm`.
RO 1 Function	Specify the RO 1 function as `Off`, `Alarms`, `Alarms + Diags`, `Diags`, `Flow Direction`, or `Test Mode`.
RO 1 Operation	If RO 1 Function is not Off, specify the operation of RO 1 as `Normally Open` or `Normally Closed`.
RO 1 State	Shows the state of RO 1 as open or closed.
RO 1 Status	Shows the status of RO 1.
RO 1 Suppress	If RO 1 Function is not Off, specify `On` to suppress reactivation of an alarm or `Off` for no suppression.
RO 2 Alarm	Similar to RO 1 Alarm.
RO 2 Function	Similar to RO 1 Function.
RO 2 Operation	Similar to RO 1 Operation.
RO 2 State	Shows the state of RO 2 as open or closed.
RO 2 Status	Shows the status of RO 2.
RO 2 Suppress	Similar to RO 1 Suppress.
Scaled mA Out Cal	Procedure to match the scaled mA output of the transmitter to the output of a specific receiving device.
Screen Setup	The folder containing screen setup parameters.
Sensor Review	The folder containing a review of sensor parameters.
Sig Lock	Shows if outputs are locked due to the state of the signal lock input. `Yes` = locked, `No` = not locked, `Disabled` = Not configured.
Signal Processing	The folder containing signal processing parameters.
Software Release	Shows the software release level.
Software Rev	Shows the software revision level.
Static Parameter Refresh	Timer interval for refresh of static parameters. Specify No Refresh or one of the times provided.

Parameter	Explanation
Status	The folder containing status parameters.
System Setup	The folder containing system setup parameters.
Tag	Enter the primary identifier used to communicate with the transmitter. Do **not** use special characters such as >, <, -, +, :, ;, or *.
Tot 1	Specify if a Total 1alarm is `Enabled` or `Disabled`.
Tot 1 Setpt	If Tot 1 is Enabled, enter the set point.
Tot 2	Similar to Tot 1.
Tot 2 Setpt	Similar to Tot 1 Setpt.
Total 1	Shows if any Total 1 alarms exist or existed.
Total 2	Shows if any Total 1 alarms exist or existed.
Total Alarms	The folder containing total alarm parameters.
Total Units	If the totalizer is used, specify the units as `Gal`, `L`, or `Custom`.
Totalizer	In Pulse Total Info, shows whether the totalizer is on or off. In Rate + Total Setup or Pulse Total Test, specify the totalizer as `On` or `Off`.
Totals Info	The folder containing totalizer information.
Transmitter Status	The folder containing transmitter status information.
Tube Model Code	Enter the model code of the flowtube.
Tube Serial Number	Enter the serial number of the flowtube.
Universal Rev	Shows the universal command set revision level.
URV	Shows the upper range value.
URV2 Value	If not a unidirectional single range application, specify the second upper range value.
URV3 Value	If unidirectional multirange application, specify the third upper range value.
Write Protect	Shows the status of write protection.
Xmtr Mode	Shows the mode as online or offline.
Xmtr Model Code	Shows the transmitter model code.
Xmtr Serial Number	Shows the transmitter serial number.

5. 83 Series Vortex Transmitters

This chapter provides information that is exclusive to using the PC50 Field Device Tool with I/A Series Vortex Transmitters with HART® communication protocol. Additional information about the transmitters and HART communication is contained in Table 4.

Table 4. Reference Documents

Document	Description
HART Communication	
MAN 4250	HART Communicator Product Manual
Transmitter Information	
MI 019-199	83F-T and 83W-T Vortex Transmitters
MI 019-174	83S-T Vortex Transmitters

⚠ WARNING

Changing the `Model Code` in Basic Setup or Detailed Setup without changing the `Reference K Factor` causes the transmitter to lock up. Also, changes in some parameters, such as Fluid Type, are interrelated with one or more other parameters. Both of these situations can result in undesired and potentially hazardous control conditions. Therefore, carefully check your configuration before downloading it to a transmitter.

Offline Menu Tree

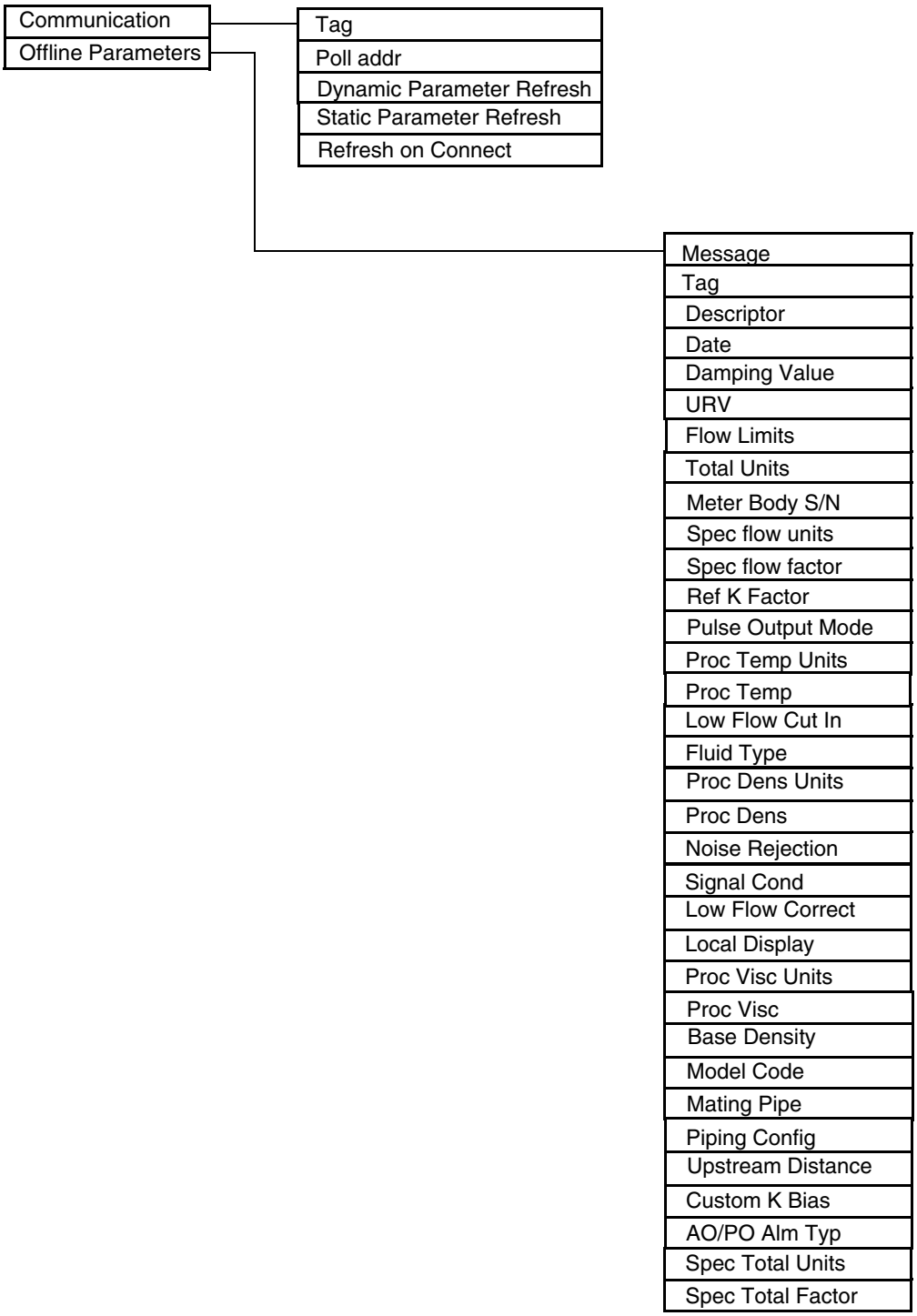

Figure 22. 83 Series Vortex Transmitter Offline Menu Tree

Online Menu Tree

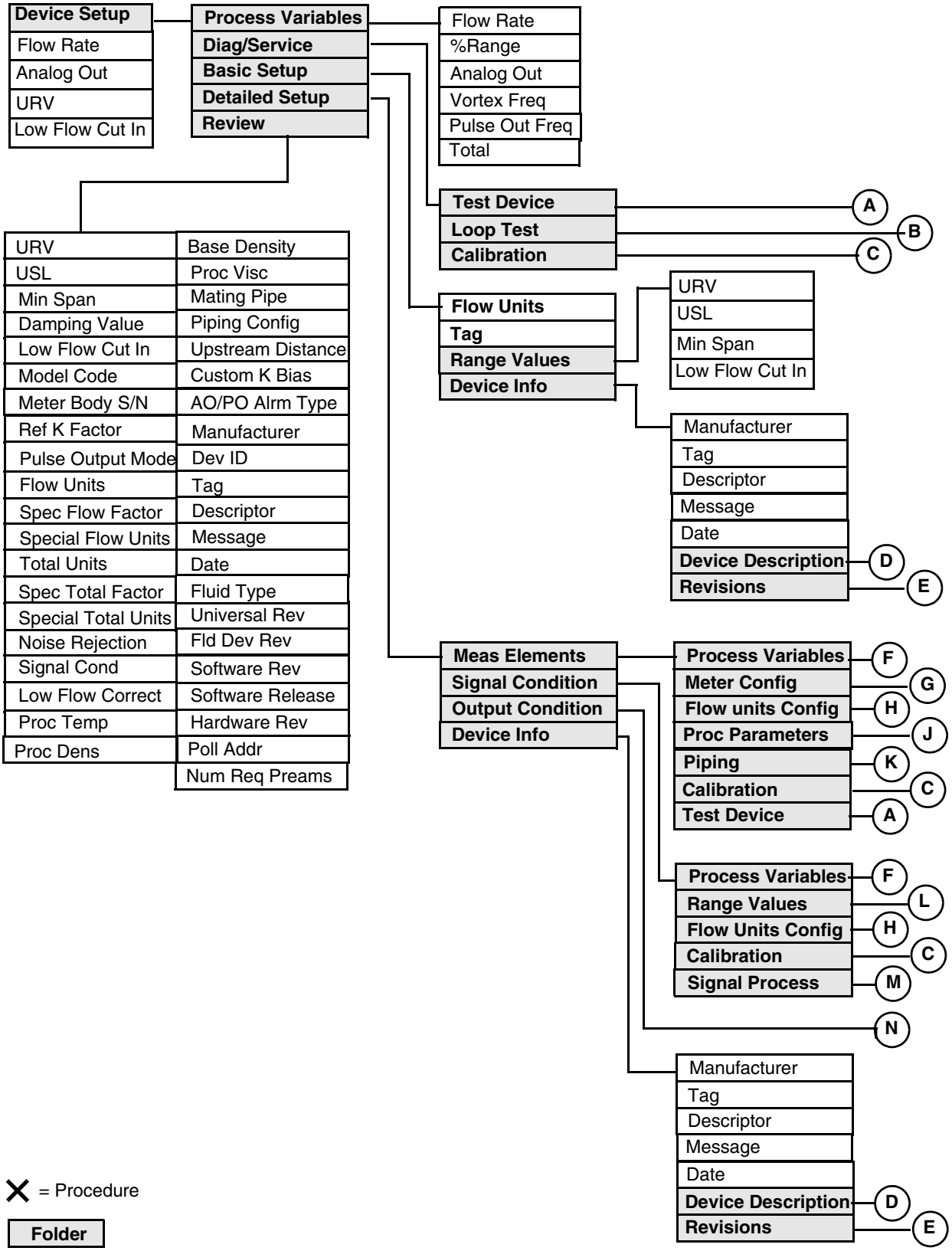

Figure 23. 83 Series Vortex Transmitter Online Menu Tree (1 of 3)

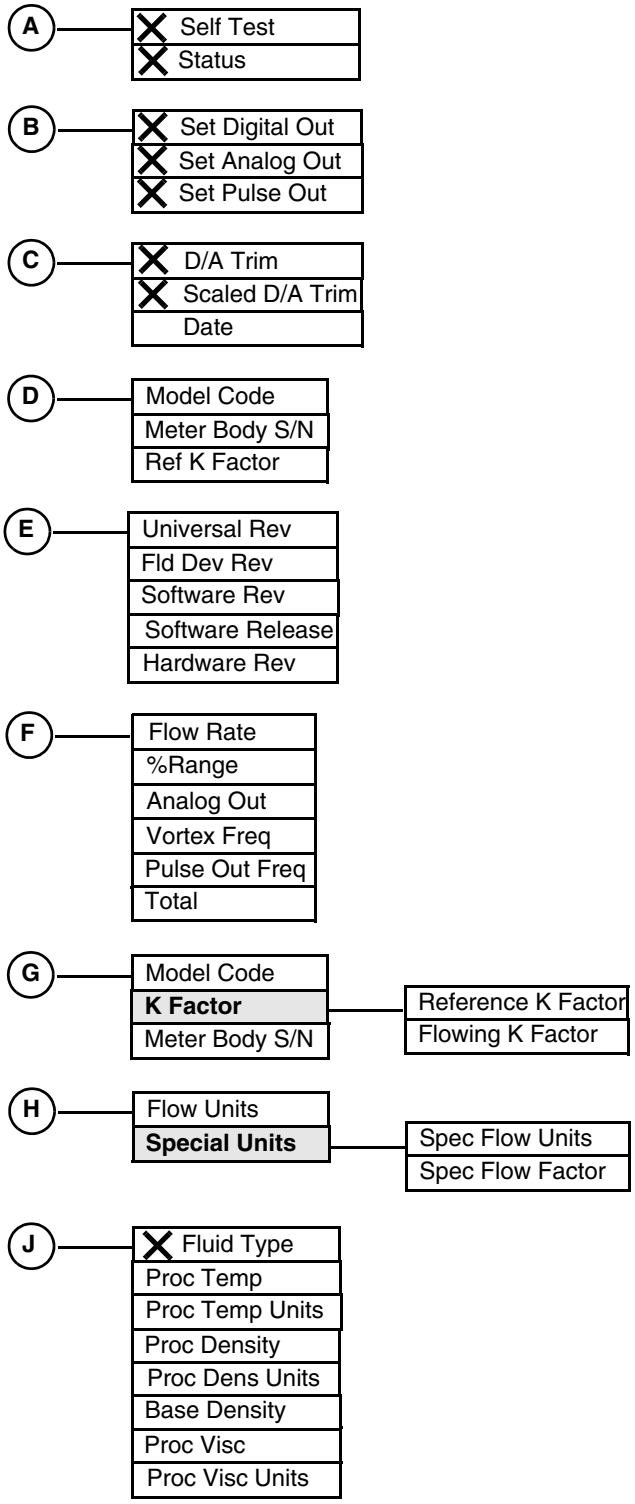

Figure 24. 83 Series Vortex Transmitter Online Menu Tree (2 of 3)

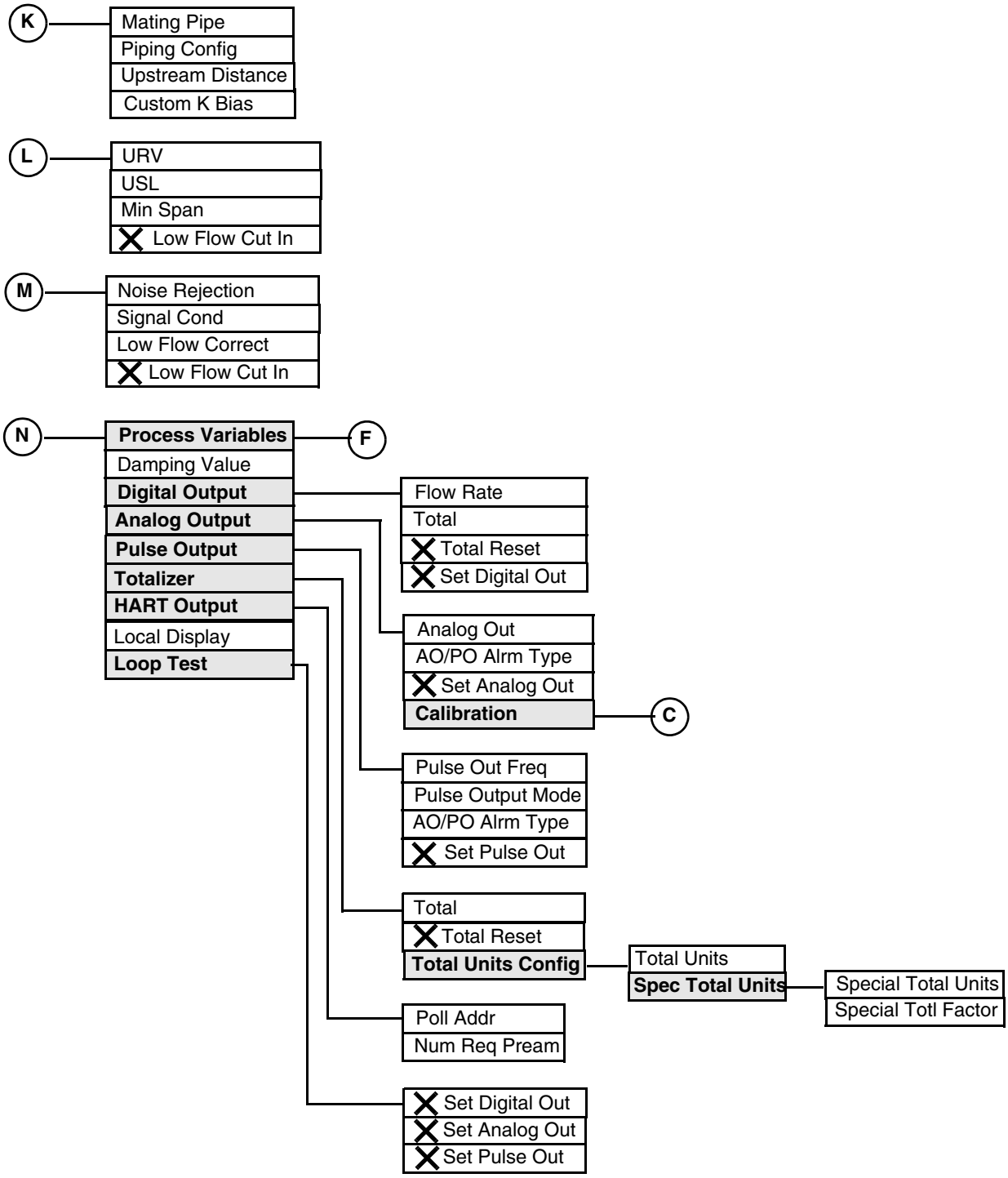

Figure 25. 83 Series Vortex Transmitter Online Menu Tree (3 of 3)

Explanation of Parameters

Parameter	Explanation
%Range	Shows the output in percent of range.
Analog Out	If analog output, shows the output in mA.
Analog Output	The folder containing analog output parameters.
AO/PO Alm Typ	Specify the alarm type as `Hi` or `Lo` alarm.
Base Density	Enter the base density in the same units as the process density.
Basic Setup	The folder containing flow units, tag, range values, and device info parameters.
Calibration	The folder containing calibration parameters.
Custom K-Bias	Enter bias in percent to adjust the flowing K-Factor.
D/A Trim	Procedure to match the mA output of the transmitter to the output of a specific receiving device.
Damping Value	Select the output damping value in seconds from the picklist presented.
Date	The date entered in the form mm/dd/yy.
Descriptor	The description of the transmitter, usually the tag name.
Detailed Setup	The folder containing measuring elements, signal condition, output condition, and device info parameters.
Dev ID	The type of device (vortex).
Device Description	The folder containing device description parameters.
Device Info	The folder containing device information parameters.
Device Setup	The folder leading to all parameters.
Diag/Service	The folder containing test and calibration parameters.
Digital Output	The folder containing digital output parameters.
Dynamic Parameter Refresh	Timer interval for refresh of dynamic parameters. Specify No Refresh or one of the times provided.
Fld Dev Rev	Shows the field device revision level.
Flowing K-Factor	Shows the flowing K Factor.
Flow Rate	Shows the flow rate in units specified.
Flow Units	Select flow units from the picklist presented.
Flow Units Config	The folder containing flow unit configuration parameters.
Fluid Type	Procedure to select `Liquid`, `Gas`, or `Steam` as the fluid.
Hardware Rev	Shows the hardware revision level.
HART Output	The folder containing HART output parameters.
K-Factor	The folder containing K-Factor parameters.
Local Display	Specify `Flow`, `Vortex Freq`, `Pulse Out Freq`, and/or `Total`.
Loop Test	The folder containing loop test parameters.
Low Flow Correct	Specify low flow correction as `On` or `Off`.
Low Flow Cut In	In the initial screen, shows the LFCI. In Signal Condition, select a value from the picklist presented.
Manufacturer	Shows the manufacturer of this device.
Mating Pipe	Select the type of mating pipe from the picklist presented.
Measuring Elements	The folder containing measuring element parameters.
Message	Optional user information. The message is limited to 32 characters and spaces.
Meter Body S/N	Shows the flowmeter serial number.
Meter Config	The folder containing flowmeter configuration parameters.
Min Span	Shows the minimum span of the flowmeter.

Parameter	Explanation
Model Code	Enter the flowmeter model code.
Noise Rejection	Specify noise rejection as `On` or `Off`.
Num Req Preams	Number of preambles to be sent in a response message from the transmitter to the Host.
Output Condition	The folder containing output condition parameters.
Piping	The folder containing piping parameters.
Piping Config	Select the piping configuration from the picklist presented.
Poll Addr	Specify 0 for operation in the standard point to point, 2-wire, 4 to 20 mA mode. Specify an address from 1 through 15 for multidrop operation.
Proc Dens	Enter the density in the units shown.
Proc Dens Units	Specify the process density units as `kg/Cum` or `lb/Cuft`.
Proc Temp	Enter the process temperature in the units shown.
Proc Temp Units	Specify the process temperature units as `degC` or `degF`.
Proc Visc	Enter the viscosity in the units shown.
Proc Visc Units	If liquid, specify the viscosity units as `cP` or `cSt`.
Proc Parameters	The folder containing process parameters
Process Variables	The folder containing process variable parameters.
Pulse Output	The folder containing the pulse output parameters.
Pulse Output Mode	Specify `Off` or `100 Hz max`.
Pulse Out Freq	If pulse output, shows the pulse output frequency.
Range Values	The folder containing range value parameters.
Ref K-Factor	Enter the factor from the flowmeter data plate.
Refresh on Connect	If `No Refresh` is selected, data that was loaded from the device in a previous session is not loaded from the device again. Update of the data is then dependent only on the refresh intervals. If `Refresh Data Set` is selected, all data is loaded from the device
Revisions	The folder containing hardware, software, and other revision levels.
Review	The folder containing a review of various parameters.
Scaled D/A Trim	Procedure to match the scaled mA output of the transmitter to the output of a specific receiving device.
Self Test	Procedure to self test the flowmeter.
Set Analog Out	Procedure to enter a mA value as a signal source to check other devices in the control loop.
Set Digital Out	Procedure to enter a digital value as a signal source to check other devices in the control loop.
Set Pulse Out	Procedure to enter a pulse value as a signal source to check other devices in the control loop.
Signal Cond	Specify signal conditioning as `On` of `Off`.
Signal Condition	The folder containing signal conditioning parameters.
Signal Process	The folder containing signal processing parameters.
Software Release	Shows the software release level.
Software Rev	Shows the software revision level.
Special Total Units	Folder containing special total units and factor.
Special Units	Folder containing special flow units and factor.
Spec Flow Factor	Enter the factor to convert the standard flow unit to your special flow unit.
Spec Flow Units	Enter the name of your special flow unit.
Spec Total Units	Enter the name of your special flow unit.
Spec Totl Fctor	Enter the factor to convert the standard total unit to your special total unit.

Parameter	Explanation
Static Parameter Refresh	Timer interval for refresh of static parameters. Specify No Refresh or one of the times provided.
Status	Procedure to show the status of the device.
Tag	The primary identifier when communicating with a transmitter. Do `not` use special characters such as >, <, -, +, :, ;, or *.
Total Units	Specify the total units from the picklist presented.
Test Device	The folder containing test device parameters.
Total	Shows the total measurement in units specified.
Totalizer	The folder containing totalizer parameters.
Total Reset	Procedure to reset the flowmeter total to zero.
Total Units	Specify the total units from the picklist presented.
Total Units Config	The folder containing total unit definition parameters.
Universal Rev	Shows the universal command set revision level.
Upstream Distance	If `Piping Config` is not `Straight`, enter the distance to the first upstream flow disturbance in pipe diameters.
URV	In the initial screen, shows the Upper Range Value. In Range Values, enter the Upper Range Value.
USL	Shows the Upper Sensor Limit of the flowmeter.
Vortex Freq	Shows the vortex frequency.

6. 140 Series Pressure Transmitters

This chapter provides information that is exclusive to using the PC50 Field Device Tool with 140 Series Pressure Transmitters with HART® communication protocol. Additional information about the transmitters and HART communication is contained in Table 5.

Table 5. Reference Documents

Document	Description
HART Communication	
MAN 4250	HART Communicator Product Manual
Transmitter Information	
EMP 0610 A EMP 0630 A EML 2610 A EML 0610 A EML 1610 A	Installation, Configuration, Operation, and Maintenance 141GP/142AP 143DP 144FP 144LD 144LVD

Offline Menu Tree

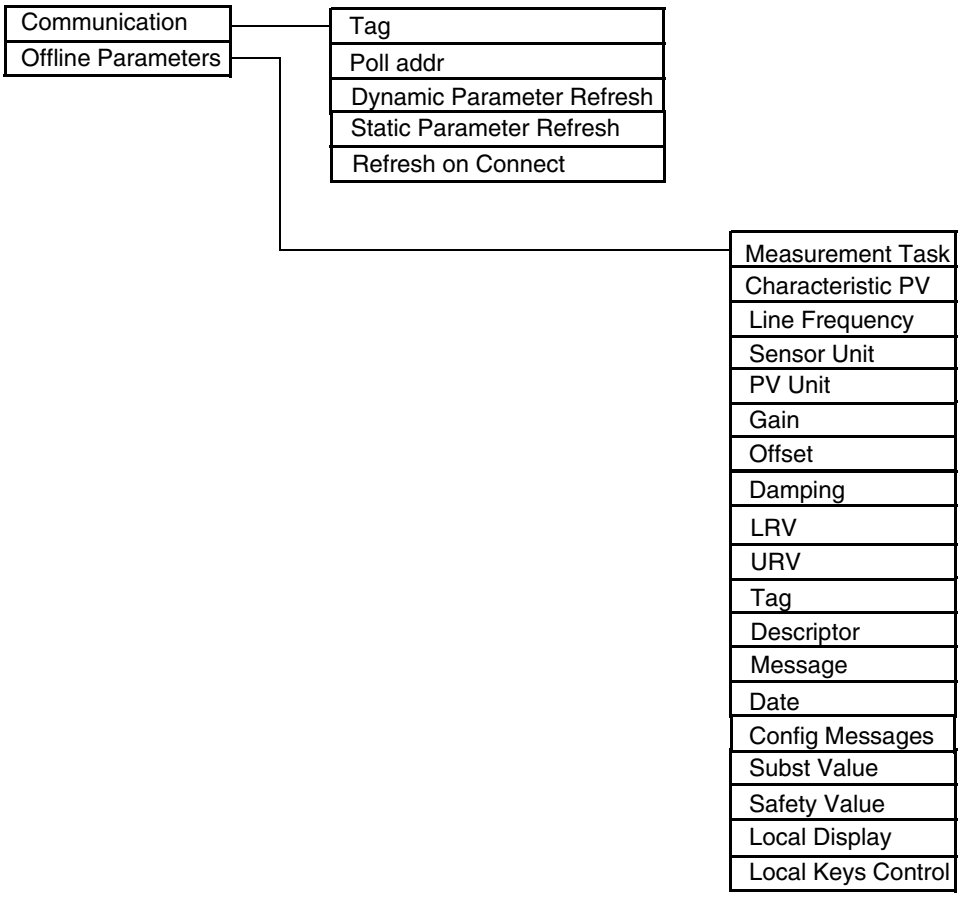

Figure 26. 140 Series Pressure Transmitter Offline Menu Tree

Online Menu Tree

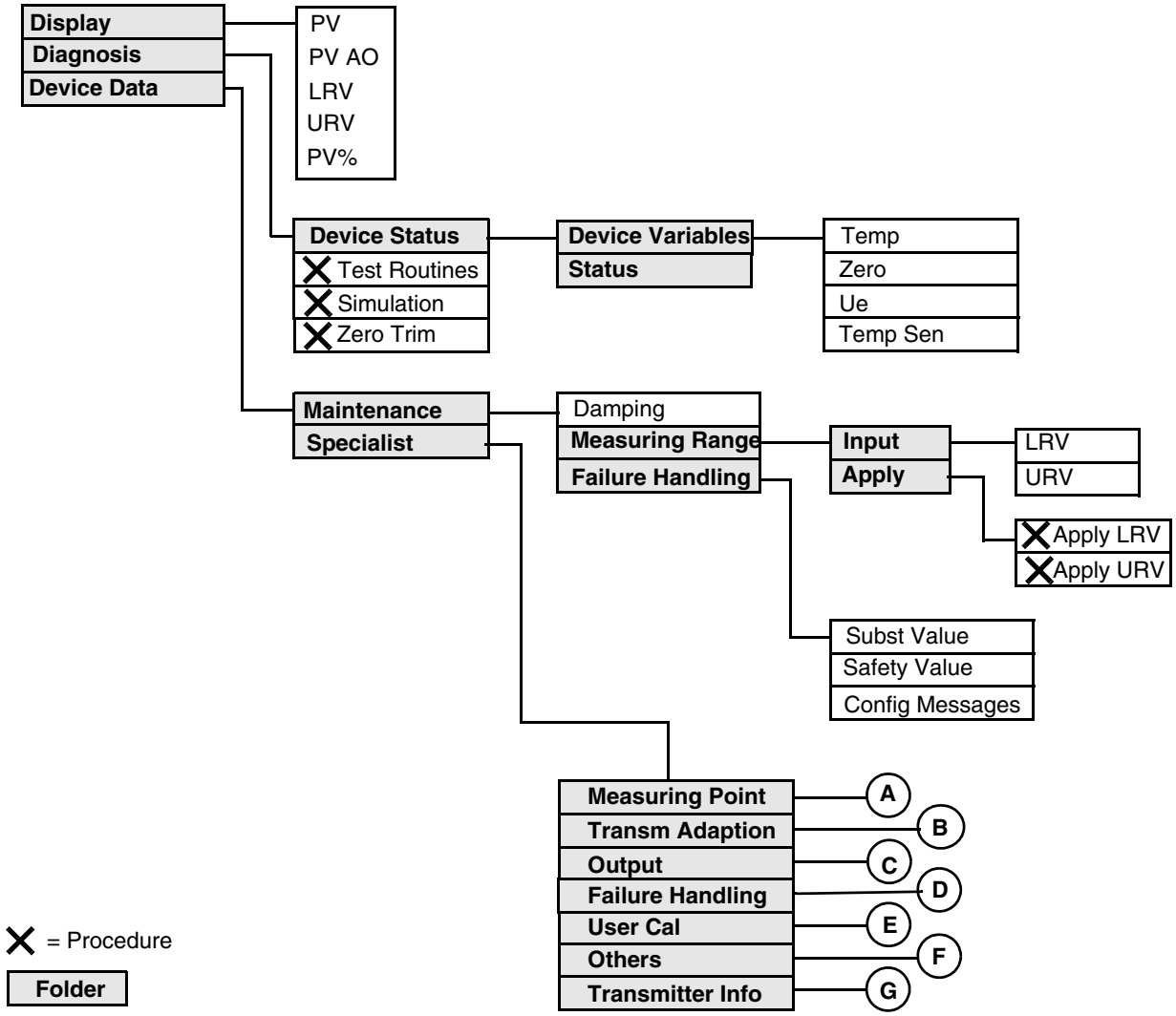

Figure 27. 140 Series Pressure Transmitter Online Menu Tree (1 of 2)

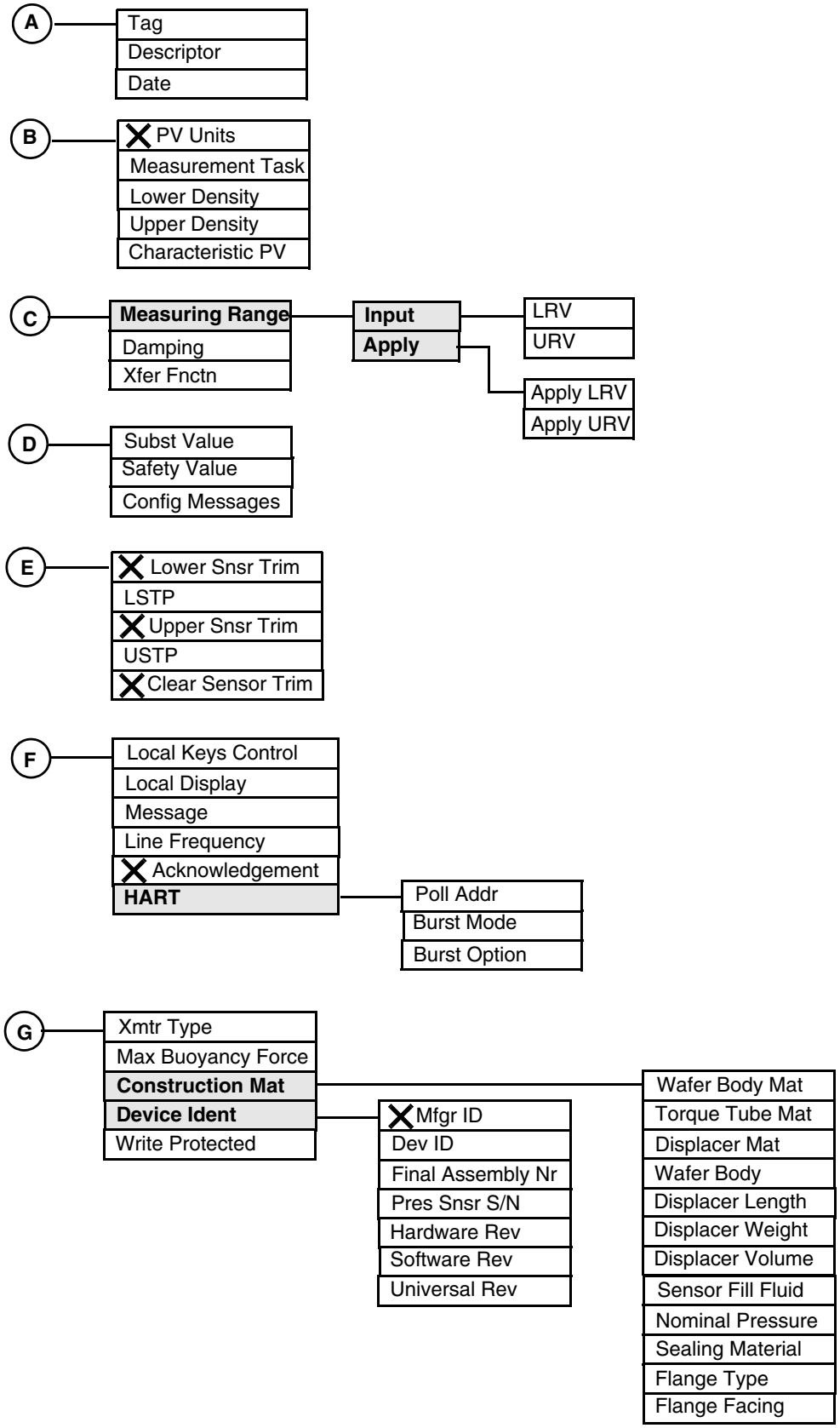

Figure 28. 140 Series Pressure Transmitter Online Menu Tree (2 of 2)

Explanation of Parameters

Parameter	Explanation
Acknowledgement	Procedure used to clear historical status. Specify Yes or No.
Apply	The folder containing parameters used to perform a calibration.
Apply LRV	Procedure to calibrate the LRV.
Apply URV	Procedure to calibrate the URV.
Burst Mode	Specify On or Off. You must specify Off with multidrop wiring.
Burst Option	Specify PV, % range/current, or process vars/crnt.
Characteristic PV	Specify the PV as Linear, Sq Root, or Special.
Clear Sensor Trim	Procedure to clear the sensor trim.
Config Messages	In Specialist, specify which errors are to cause the device to go into failsafe state. In Maintenance, shows this information.
Construction Mat	The folder containing construction material identification.
Damping	Specify damping between 0 and 32 seconds.
Date	The date entered in the form mm/dd/yy.
Descriptor	The description of the transmitter, usually the tag name.
Dev ID	Shows the device model number.
Device Data	The folder containing maintenance and configuration parameters.
Device Ident	The folder containing the device identification information.
Device Status	The folder containing device status parameters.
Device Variables	The folder containing the internal temperature, sensor temperature, zero, and Ue.
Diagnosis	The folder containing the diagnostic parameters.
Display	The folder containing measurement readings.
Displacer Length	Shows the displacer length.
Displacer Mat	Shows the displacer material.
Displacer Volume	Shows the displacer length.
Displacer Weight	Shows the displacer weight
Displays	Displays the process variable (PV), the output in mA (PV AO), the lower range value (LRV), the upper range value (URV). and the process variable in percent of range (PV%)
Dynamic Parameter Refresh	Timer interval for refresh of dynamic parameters. Specify No Refresh or one of the times provided.
Failure Handling	Folders containing failsafe handling parameters.
Final Assembly Nr	Shows the final assembly number.
Flange Facing	Shows the flange facing.
Flange Type	Shows the flange type.
Gain	Enter the sensor unit conversion gain value.
Hardware Rev	Shows the hardware revision level.
HART	The folder containing the HART communication parameters.
Input	The folder containing parameters used to rerange the transmitter without calibration equipment.
Line Frequency	Specify the ac frequency of the power supply (50 or 60 Hz).
Local Display	Specify what is to be shown on the local display (Units Display, % of Range Display, AO Display, None)
Local Keys Control	Specify the degree of control by local keys (Active, Span Disabled, Zero + Span Disabled, Disabled, None).
Lower Density	For certain device types, specify the lower density value.
Lower Sensor Trim	Procedure to calibrate the lower calibration point.

Parameter	Explanation
LRV	In Display, shows the Lower Range Value. In Input, enter the Lower Range Value.
LSTP	Specify the lower calibration point.
Maintenance	The folder containing maintenance parameters.
Max Buoyancy Force	Shows the maximum buoyance force.
Measurement Range	The folder containing parameters to rerange or calibrate the transmitter.
Measurement Task	Specify the measurement task as `Liquid Level`, `Liquid Interface`, `Liquid Density`, `Pressure`, `Diff Pressure`, `Flow`, or `Special`.
Measuring Point	The folder containing the tag, descriptor, and date.
Message	Enter optional user information. The message is limited to 32 characters and spaces.
Mfgr ID	Shows the manufacturer (Eckhardt).
Nominal Pressure	Shows the nominal pressure.
Offset	Enter the sensor unit conversion offset value.
Others	The folder containing other miscellaneous parameters.
Output	The folder containing measuring range, damping, and transfer function.
Poll Addr	Specify 0 for operation in the standard point to point, 2-wire, 4 to 20 mA mode. Specify an address from 1 through 15 for multidrop operation.
Pres Snsr S/N	Shows the pressure sensor serial number.
PV	Shows the value of the process variable.
PV%	Shows the process variable in percent of range.
PV AO	Shows the analog output of the process variable.
PV Unit	Specify the PV unit from the picklist presented.
PV Units	Procedure to specify the currently configured PV unit as `OK`, `Standard`, or `Special`.
Refresh on Connect	If `No Refresh` is selected, data that was loaded from the device in a previous session is not loaded from the device again. Update of the data is then dependent only on the refresh intervals. If `Refresh Data Set` is selected, all data is loaded from the device
Safety Value	In Specialist, specify the failsafe value if not the last value. In Maintenance, shows this information.
Sealing Material	Shows the sealing material.
Sensor Fill Fluid	Shows the sensor fill fluid.
Sensor Unit	The sensor unit is percent.
Simulation	Procedure to use the transmitter as a mA calibration source.
Software Rev	Shows the software revision level.
Specialist	The folder containing configuration parameters.
Static Parameter Refresh	Timer interval for refresh of static parameters. Specify No Refresh or one of the times provided.
Status	Shows the status of the device.
Subst Value	In Specialist, specify the failsafe state as `Store` at the last value or go to a `Safety` value. Also, if return from failsafe is `Auto`matic or by `Man`ual command. In Maintenance, shows this information.
Tag	The primary identifier when communicating with a transmitter. Do **not** use special characters such as >, <, -, +, :, ;, or *.
Temp	Shows the electronic temperature.
Temp Sen	Shows the sensor temperature.
Test Routines	Procedure to perform internal test routines.
Torque Tube Mat	Shows the torque tube material.
Transm Adaption	The folder containing measurement task, PV definition, and density values.
Transmitter Info	The folder containing transmitter description parameters.

Parameter	Explanation
Ue	Shows the input signal of DMU in percent.
Universal Rev	Shows the universal command set revision level.
Upper Density	For certain device types, specify the upper density value.
Upper Sensor Trim	Procedure to calibrate the upper calibration point.
URV	In Display, shows the Lower Range Value. In Input, enter the Lower Range Value.
User Cal	The folder containing the user calibration parameters.
USTP	Specify the upper calibration point.
Wafer Body	Shows the wafer body size.
Wafer Body Mat	Shows the wafer body material.
Write Protected	Shows write protection as `No, Yes`, `Not Used`, `None`, `Unknown`, or `Spcl`.
Xfer Fuctn	Specify the transmitter function as `Linear` or `Sq Root`.
Xmtr Type	Shows the transmitter type as `Diff Pressure ECEP`, `Level Buoyancy Torque Tube`, `Level Buoyancy Torque Tube ECEP`, `Level Flange`, `Level Flange ECEP`, `Level Buoyancy`, or `Level Buoyancy ECEP`.
Zero	Shows the compensation value of zero offset of DMU sensor in percent.
Zero Trim	Procedure to perform a zero trim.

7. SRD991 Intelligent Positioner

This chapter provides information that is exclusive to using the PC50 Field Device Tool with SRD991, SRD960, SRD970, and NAF LinkIT Intelligent Positioners with HART® communication protocol. Additional information about the transmitters and HART communication is contained in Table 6.

NOTE

This chapter also applies to the SRD970, SRD960, and NAF LinkIT Intelligent Positioners.

Table 6. Reference Documents

Document	Description
HART Communication	
MAN 4250	HART Communicator Product Manual
Transmitter Information	
MI EVE0105 A	SRD991, SRD960, SRD970, and NAF LinkIT Intelligent Positioners - Installation, Configuration, Operation, and Maintenance

Offline Menu Tree

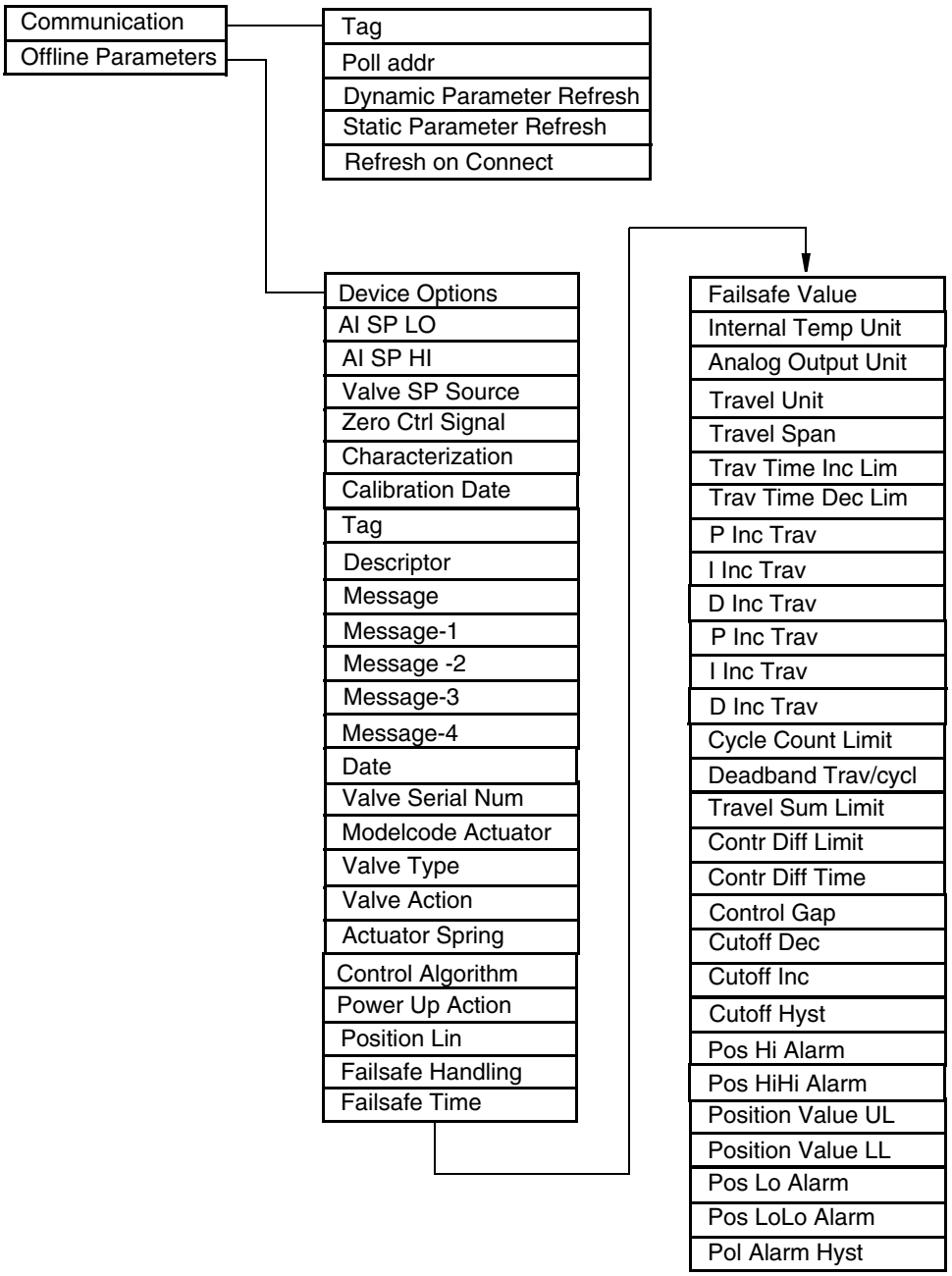

Figure 29. SRD991 Intelligent Positioner Offline Menu Tree

Online Menu Tree

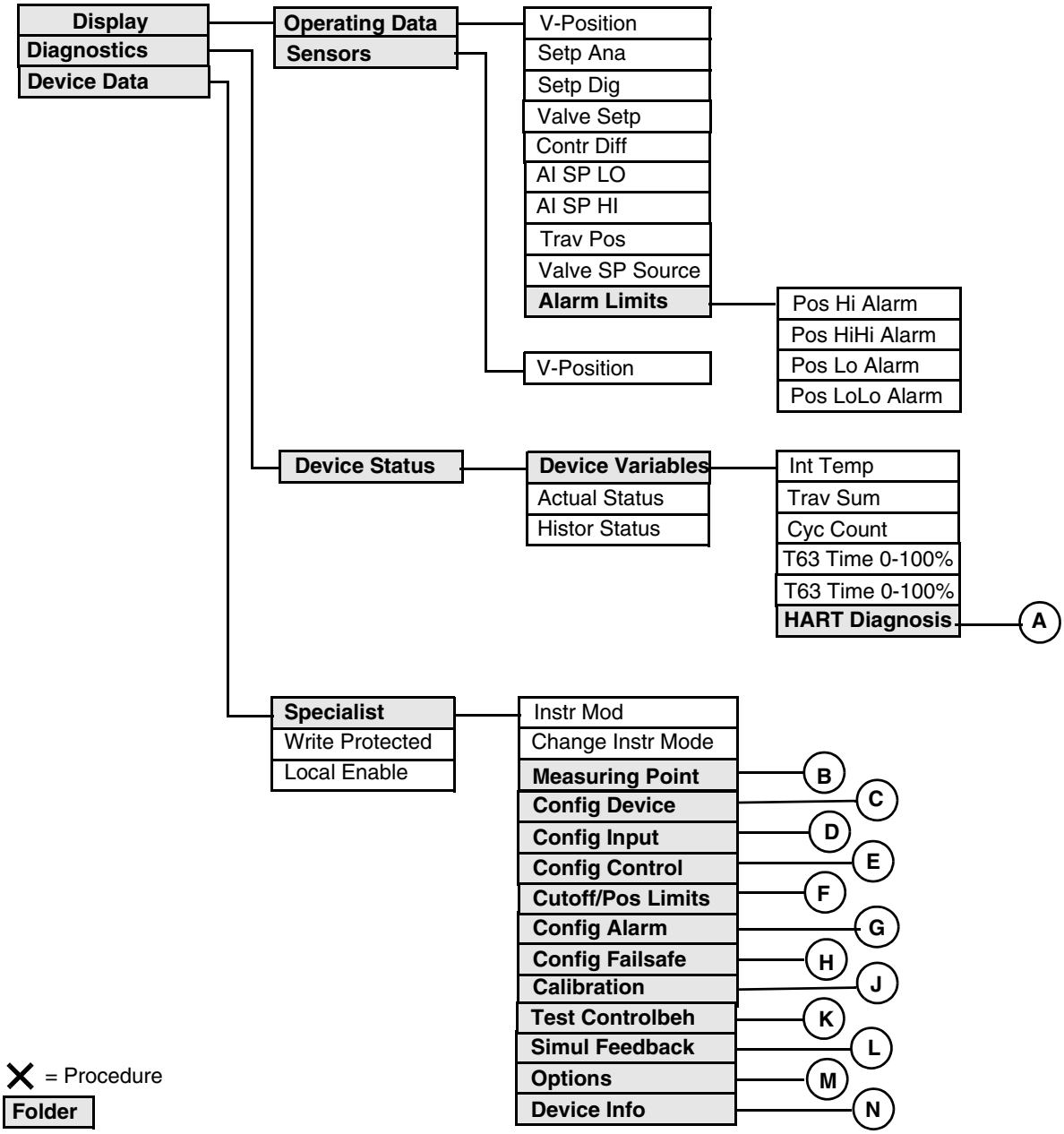

Figure 30. SRD991 Intelligent Positioner Online Menu Tree (1 of 3)

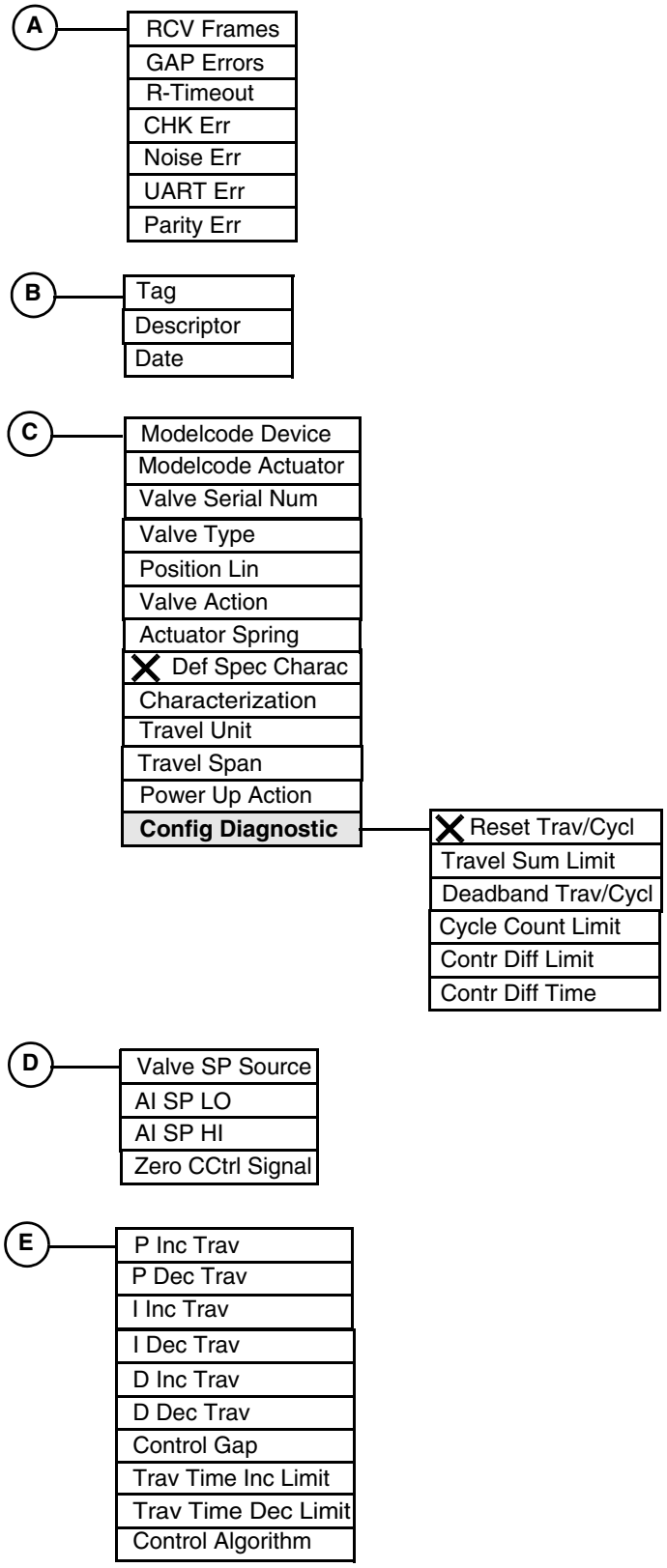

Figure 31. SRD991 Intelligent Positioner Online Menu Tree (2 of 3)

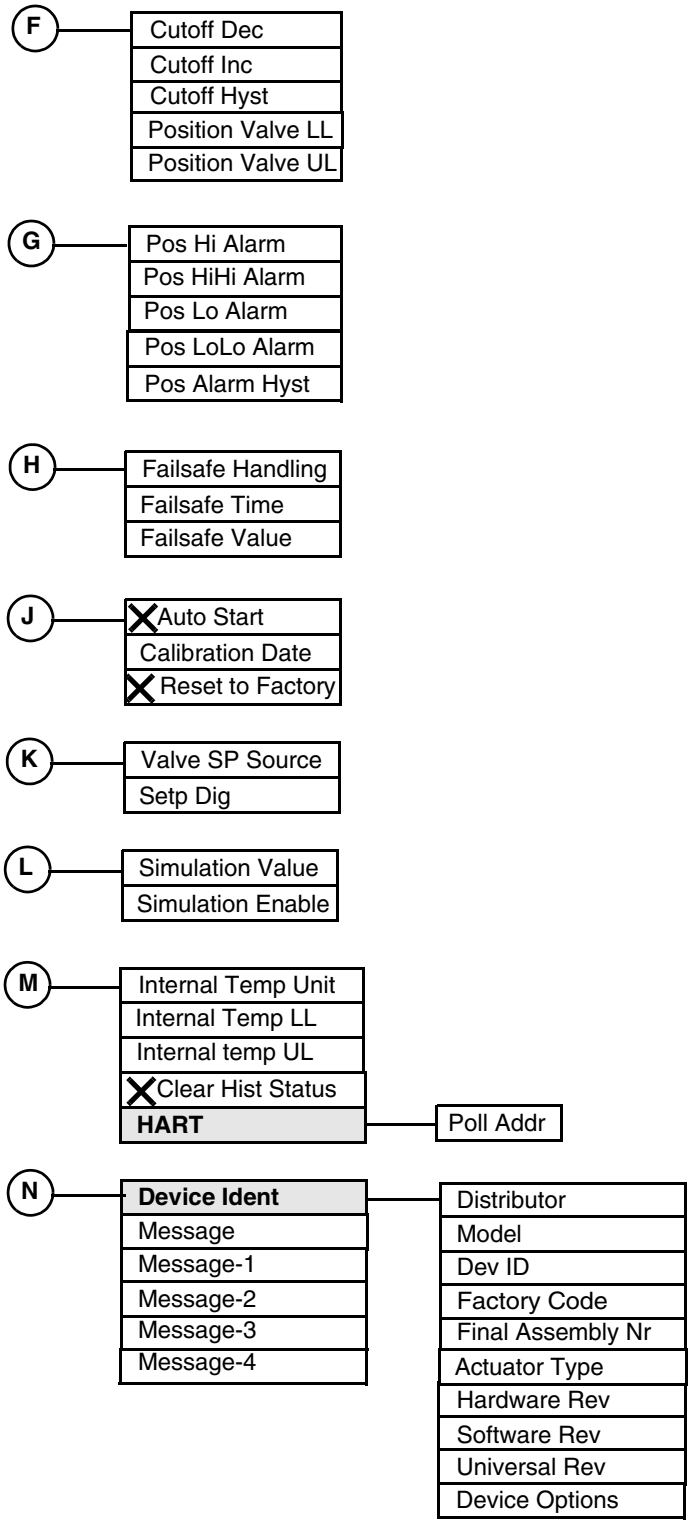

Figure 32. SRD991 Intelligent Positioner Online Menu Tree (3 of 3)

Explanation of Parameters

Parameter	Explanation
Actual Status	Shows the actual status of various conditions.
Actuator Spring	Specify whether a spring `Opens Valve`, `Closes Valve`, or there is `No Spring`.
Actuator Type	Shows the actuator type (electro-pneumatic)
AI SP HI	In Operating Data, shows the analog input high setpoint. In Config Input, enter the setpoint value.
AI SP LO	In Operating Data, shows the analog input low setpoint. In Config Input, enter the setpoint value.
Alarm Limits	The folder containing alarm limit information.
Auto Start	Procedure to perform an autostart calibration.
Calibration	The folder containing calibration parameters
Calibration Date	Enter the date of the last calibration in the form mm/dd/yyyy.
Change Instr Mode	Specify the instrument mode as `Out Serv` or `In Serv`.
Characterization	Specify the type of characterization (Linear, Equal 1:50, Inv Equal 1:15, or Special Characterization)
CHK Err	Shows checksum errors.
Clear Hist Status	Procedure to clear the historical status.
Config Alarm	The folder containing alarm configuration parameters.
Config Control	The folder containing control configuration parameters.
Config Device	The folder containing device configuration parameters.
Config Diagnostic	The folder containing diagnostic configuration parameters.
Config Failsafe	The folder containing failsafe configuration parameters
Config Input	The folder containing input configuration parameters.
Contr Diff	Shows the control difference in percent.
Contr Diff Limit	Enter the limit in percent of travel.
Contr Diff Time	Enter the time in seconds.
Control Algorithm	Enter the algorithm as PID.
Control Gap	Enter the value under which no corrective action is taken if the control difference is less than this value.
Cutoff Dec	Enter the value in percent of travel below which the valve is fully closed. For example, when set at 2%, any signal below 2% is treated as 0%.
Cutoff Hyst	Enter the amount of hysteresis in percent of travel required above the cutoff value before the valve can reopen again. For example, with 2% cutoff, 0.5% cutoff hysteresis allows the valve to reopen at 2.5%.
Cutoff Inc	Enter the value in percent of travel above which the valve is fully open.
Cutoff/Pos Limits	The folder containing cutoff and valve position parameters.
Cyc Count	Shows the cycle count in number of cycles.
Cycle Count Limit	Enter the alarm condition in number of cycles. Each cycle is a change in valve direction, any movement up or down, which exceeds sensitivity of the device.
D Dec Trav	For decreasing position, enter the derivative time in seconds.
D Inc Trav	For increasing position, enter the derivative time in seconds.
Date	The date entered in the form mm/dd/yyyy.
Deadband Trav/Cycl	Enter the deadband in percent of stroke. Small movements below this value are not included in the travel sum.
Def Spec Charac	Procedure used to define a custom curve if a Special Characterization is specified.
Descriptor	The description of the device, usually the tag name.

Parameter	Explanation
Dev ID	Shows the device model number.
Device Data	The folder containing configuration parameters.
Device Ident	The folder containing device identification information.
Device Info	The folder containing device information.
Device Options	Shows the device options that are included in your positioner.
Device Status	The folder containing device status information.
Device Variables	The folder containing device variable information.
Diagnostics	The folder containing device status information.
Display	The folder containing operating data and sensor information.
Distributor	Specify the distributor from the picklist provided.
Dynamic Parameter Refresh	Timer interval for refresh of dynamic parameters. Specify No Refresh or one of the times provided.
Factory Code	Shows the factory code.
Failsafe Handling	Specify failsafe as `Safety Position` (positioner exhausts all air in the actuator), `Hold Last Value` (last valve position), or `Defined Position` (position specified in Failsafe Value).
Failsafe Time	Enter the failsafe timeout in seconds.
Failsafe Value	Enter the value for the `Defined Position` explained above.
Final Assembly Nr	Shows the final assembly number.
GAP Errors	Shows gap errors.
Hardware Rev	Shows the hardware revision level.
HART	The folder containing the poll address.
HART Diagnosis	The folder containing HART diagnosis information.
Histor Status	Shows the actual status of various conditions.
I Dec Trav	For decreasing position, enter the reset time in seconds.
I Inc Trav	For increasing position, enter the reset time in seconds.
Instr Mod	Specify the instrument mode as `Out Serv`, `In Serv`, `Failsafe`, `Diag`, `Calib`, `Fail`, `Rangecal`, or `Ramp`.
Int Temp	Shows the internal temperature in the units specified.
Internal Temp LL	Shows the internal temperature lower limit.
Internal Temp UL	Shows the internal temperature upper limit.
Internal Temp Unit	Specify the unit as `degC` or `degF`.
Local Enable	Specify the local mode as `Enable` or `Disable`.
Measuring Point	The folder containing Tag, Descriptor, and Data parameters.
Message	Optional user information. The message is limited to 32 characters and spaces.
Model	Shows the model of the positioner.
Modelcode Actuator	Enter the model code of the actuator.
Modelcode Device	Shows the model code of the positioner.
Noise Err	Shows noise errors.
Operating Data	The folder containing operating data information.
Options	The folder containing internal temperature, clear history status, and HART parameters.
P Dec Trav	For decreasing position, enter the proportional gain value.
P Inc Trav	For increasing position, enter the proportional gain value
Parity Err	Shows parity errors.
Poll Addr	Specify 0 for operation in the standard point to point, 2-wire, 4 to 20 mA mode. Specify an address from 1 through 15 for multidrop operation.
Pos Alarm Hyst	Enter the alarm hysteresis in percent of travel.

Parameter	Explanation
Pos Hi Alarm	In Operating Data, shows the high (warning) alarm position in percent of stroke. In Config Alarm, enter this value.
Pos HiHi Alarm	In Operating Data, shows the high high (full) alarm position in percent of stroke. In Config Alarm, enter this value.
Pos Lo Alarm	In Operating Data, shows the low (warning) alarm position in percent of stroke. In Config Alarm, enter this value.
Pos LoLo Alarm	In Operating Data, shows the low low (full) alarm position in percent of stroke. In Config Alarm, enter this value.
Position Lin	Specify the valve stem movement from the picklist presented.
Position Valve LL	Enter the lower travel stop in percent of total stroke.
Position Valve UL	Enter the upper travel stop in percent of total stroke.
Power Up Action	Specify the power up action as `In Serv` or `Failsafe`.
RCV Frames	Shows number of frames received.
Refresh on Connect	If `No Refresh` is selected, data that was loaded from the device in a previous session is not loaded from the device again. Update of the data is then dependent only on the refresh intervals. If `Refresh Data Set` is selected, all data is loaded from the device
Reset to Factory	Procedure to reset to the factory calibration.
Reset Trav/Cycl	Procedure used to reset the travel cycle count.
R-Timeout	Shows the reply timeout.
Sensors	The folder containing the valve position in percent.
Setp Ana	Shows the analog setpoint in mA.
Setp Dig	In Operating Data, shows the digital setpoint in percent. In Test Control, enter this value.
Simul Feedback	The folder containing simulation parameters.
Simulation Enable	Specify simulation as `Enable` or `Disable`.
Simulation Value	Enter the simulation value in percent.
Software Rev	Shows the software revision level.
Specialist	The folder containing configuration parameters.
Static Parameter Refresh	Timer interval for refresh of static parameters. Specify No Refresh or one of the times provided.
T63 Time 0-100%	Shows the time in seconds for the valve to travel 63% of its full stroke in the increasing direction during autostart.
T63 Time 100-0%	Shows the time in seconds for the valve to travel 63% of its full stroke in the decreasing direction during autostart.
Tag	The primary identifier when communicating with a device. Do `not` use special characters such as >, <, -, +, :, ;, or *.
Test Controlbeh	The folder containing Valve SP Source and Setp Dig parameters.
Trav Pos	Shows the travel position in units specified.
Trav Sum	Shows the travel sum in number of strokes.
Trav Time Dec Limit	Enter the limit under which travel time slows down control valve response.
Trav Time Inc Limit	Enter the limit over which travel time slows down control valve response.
Travel Span	Shows the travel span in units specified.
Travel Sum Limit	Enter the alarm condition in number of full strokes. Partial movement larger than the deadband value are included in this total. (for example, four 1/4 strokes is counted as one full stroke.
Travel Unit	Specify the travel unit as `In`, `mm`, or `Degree`.
UART Err	Shows UART (Universal Asynchronous Receiver Transmitter) errors.
Universal Rev	Shows the universal command set revision level.
Valve SP Source	In Operating Data, shows the Valve SP Source. In Config Input and Calibration, select `Local User`, `Analog`, or `Digital`.

Parameter	Explanation
Valve Action	Specify the actuator action as `Single Acting` or `Double Acting`.
Valve Serial Num	Enter the valve serial number.
Valve Setp	Shows the valve setpoint in percent.
Valve Type	Specify the valve type from the picklist presented.
V-Position	Shows the valve position in percent.
Write Protected	Specify write protection as `Yes` or `No`
Zero Ctrl Signal	Specify control action as `Inc Setpoint Opens` or `Inc Setpoint Closes`.

8. CFT50 Mass Flow Transmitters

This chapter provides information that is exclusiMI 020-505ve to using the PC50 Field Device Tool with I/A Series Vortex Transmitters with HART® communication protocol. Additional information about the transmitters and HART communication is contained in Table 7.

Table 7. Reference Documents

Document	Description
HART Communication	
MAN 4250	HART Communicator Product Manual
Transmitter Information	
MI 019-132	CFT50 Mass Flow Transmitters

Offline Menu Tree

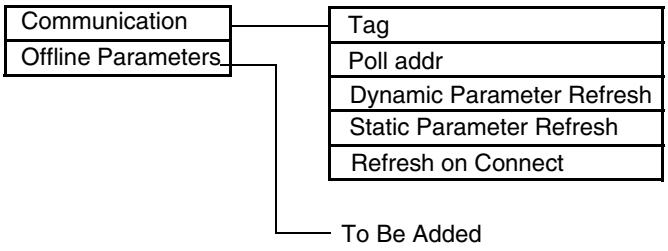

Figure 33. CFT50 Mass Flow Transmitter Offline Menu Tree

Online Menu Tree

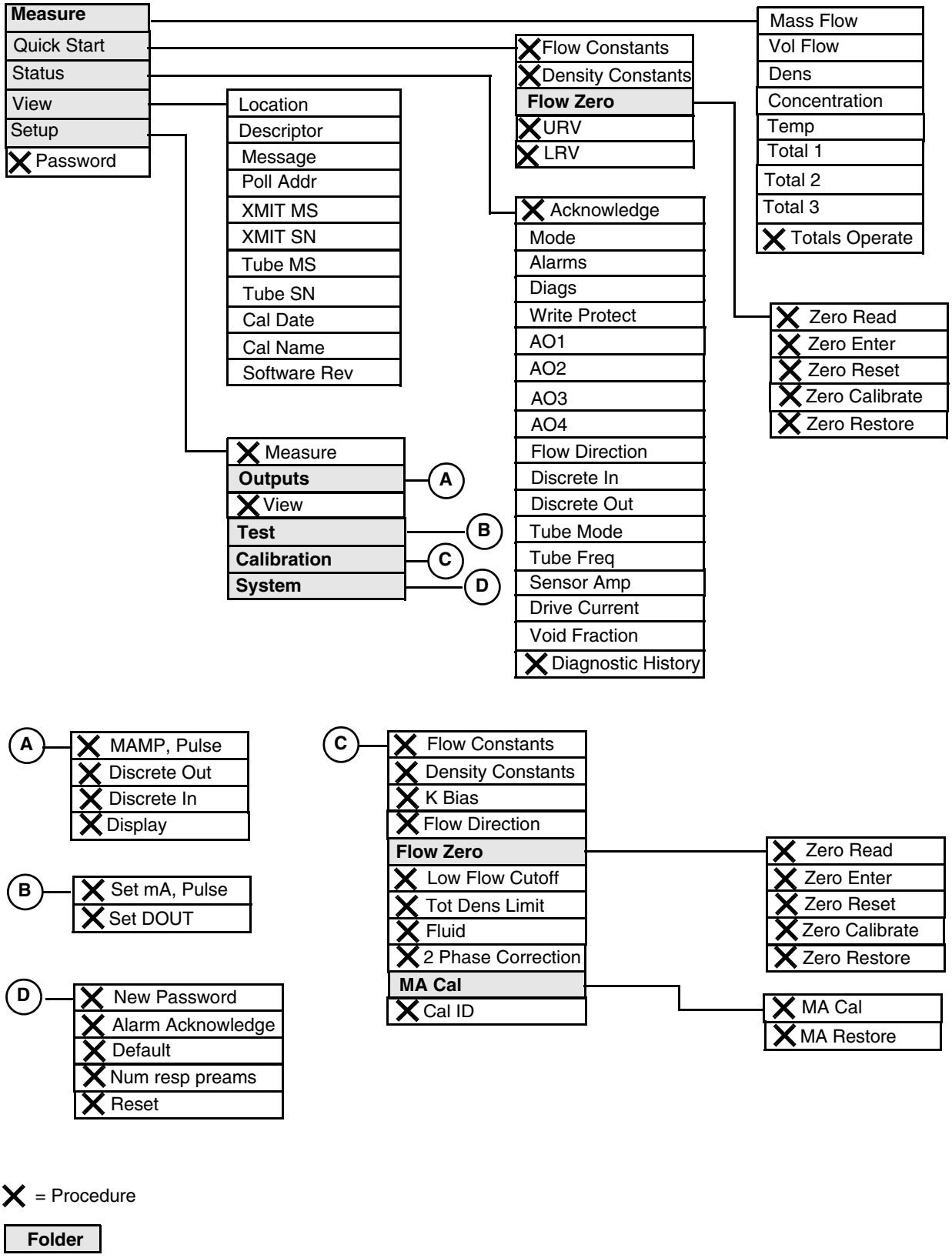

Figure 34. CFT50 Mass Flow Transmitter Menu Tree

Explanation of Parameters

Parameter	Explanation
2 Phase Correction	Procedure to produce flow corrections in 2-phase applications for greater accuracy.
Acknowledge	Procedure to acknowledge alarm and diagnostic conditions.
Alarm Acknowledge	Procedure to establish alarm acknowledge as auto or manual.
Alarms	Shows the alarm status.
AO1 through AO4	Shows the mA and pulse output values.
CAl Date	Shows the date of the last calibration.
Cal ID	Enter the date of the last calibration and the calibrator's name.
Cal Name	Shows the name of the person who performed the last calibration.
Calibration	The folder containing Calibration procedures.
Concentration	Shows the value of concentration.
Default	Procedure to rewrite all calibration and configuration values with factory default values.
Dens	Shows the density value.
Density Constants	Procedure to enter the density constants.
Descriptor	Shows the HART descriptor (if any).
Diagnostic History	Shows the diagnostic history (not available at this time).
Diags	Shows the diagnostic status.
Discrete In	In Status, shows the contact in state. In Outputs, procedure to configure the function of the contact input.
Discrete Out	In Status, shows the contact out state. In Outputs, procedure to configure the function of the contact output.
Display	Procedure to configure the transmitter display parameters.
Drive Current	Shows the drive current value.
Dynamic Parameter Refresh	Specify No Refresh or one of the times provided.
Flow Constants	Procedure to enter the flow constants.
Flow Direction	In Status, shows the flow direction. In Calibration, procedure to specify the direction of flow through the flowtube.
Flow Zero	The folder containing procedures to zero the transmitter.
Fluid	Procedure to establish the definition of fluid components A and B.
K Bias	Procedure to set the K Bias.
Location	Shows the location of the transmitter.
Low Flow Cutoff	Procedure to set the low flow cutoff.
LRV	Procedure to set the lower range value.
MA Cal	The folder containing mA calibration procedures. Procedure to trim the mA output of the transmitter to match the calibration of a receiving device if necessary.
MA Restore	Procedure to restore the factory default calibration.
MAMP, Pulse	Procedure to configure the mA and pulse output parameters.
Mass Flow	Shows the value of mass flow.
Measure	In the main menu, the folder containing measurements. In Setup, the procedure to configure measurement parameters.
Message	Shows the HART message (if any).
Mode	Shows the mode as online or offline.
New Password	Procedure to initially enter or change passwords.
Num resp preams	Number of preambles to be sent in a response message from the transmitter to the Host.

Parameter	Explanation
Outputs	The folder containing output parameters
Password	Procedure to initially enter or change passwords.
Poll Addr	Shows the polling address.
Quick Start	The folder containing quick start parameters.
Refresh on Connect	Specify No Refresh or Refresh Data Set.
Reset	Procedure to reset the system.
Sensor Amp	Shows the sensor amplitude value.
Set DOUT	Procedure to set the transmitter output to calibrate other instruments in the control loop.
Set mA, Pulse	Procedure to set the transmitter output to calibrate other instruments in the control loop.
Setup	The folder containing setup parameters.
Software Rev	Shows the software version.
Static Parameter Refresh	Specify No Refresh or one of the times provided.
Status	The folder containing status parameters.
System	The folder containing system parameters.
Tag	The primary identifier when communicating with a transmitter. Do `not` use special characters such as >, <, -, +, :, ;, or *.
Temp	Shows the temperature value.
Test	The folder containing test parameters.
Tot Dens Limit	Procedure to set the density limit below which mass flow measurement is zero.
Total 1 (or 2 or 3)	Shows the value of Total 1 (or 2 or 3).
Totals Operate	Procedure to start, stop, or reset the total selected.
Tube Freq	Shows the flowtube frequency value.
Tube Mode	Shows the flowtube mode (offline, startup, or normal).
Tube MS	Shows the flowtube model number.
Tube SN	Shows the flowtube serial number.
URV	Procedure to set the upper range value.
View	The folder containing view parameters. Procedure to specify setup identifiers.
Void Fraction	Shows the void fraction in percent.
Vol Flow	Shows the value of volume flow.
Write Protect	Shows if write protection is On or Off.
Xmit MS	Shows the transmitter model number.
Xmit SN	Shows the transmitter model number.
Zero Calibrate	Procedure to perform a zero calibration.
Zero Enter	Procedure to a value for zero.
Zero Read	Procedure to read the zero value.
Zero Reset	Procedure to set the offset value to zero.
Zero Restore	Procedure to restore the factory default zero.

9. IMV25, IMV30, and IMV31 I/A Series Multivariable Transmitters

This chapter provides information that is exclusive to using the PC50 Field Device Tool with IMV25 and IMV30 I/A Series® Multivariable Transmitters with HART® communication protocol. Additional information about the transmitters and HART communication is contained in Table 8.

Table 8. Reference Documents

Document	Description
HART Communication	
MAN 4250	HART Communicator Product Manual
Transmitter Information	
MI 020-382	IMV25-T and IMV30-T Multivariable Transmitters
MI 020-383	IMV31-T Multivariable Transmitters

Offline Menu Tree

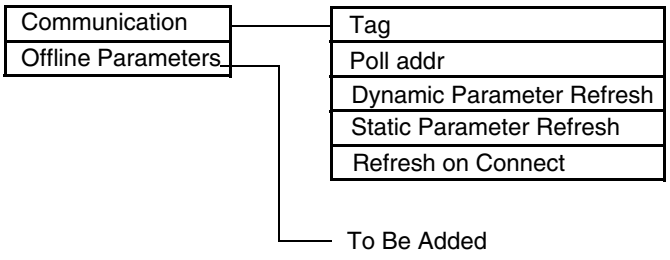

Figure 35. IMV25, IMV30, and IMV31 Multivariable Transmitter Offline Menu Tree

IMV25 and IMV30 Online Menu Tree

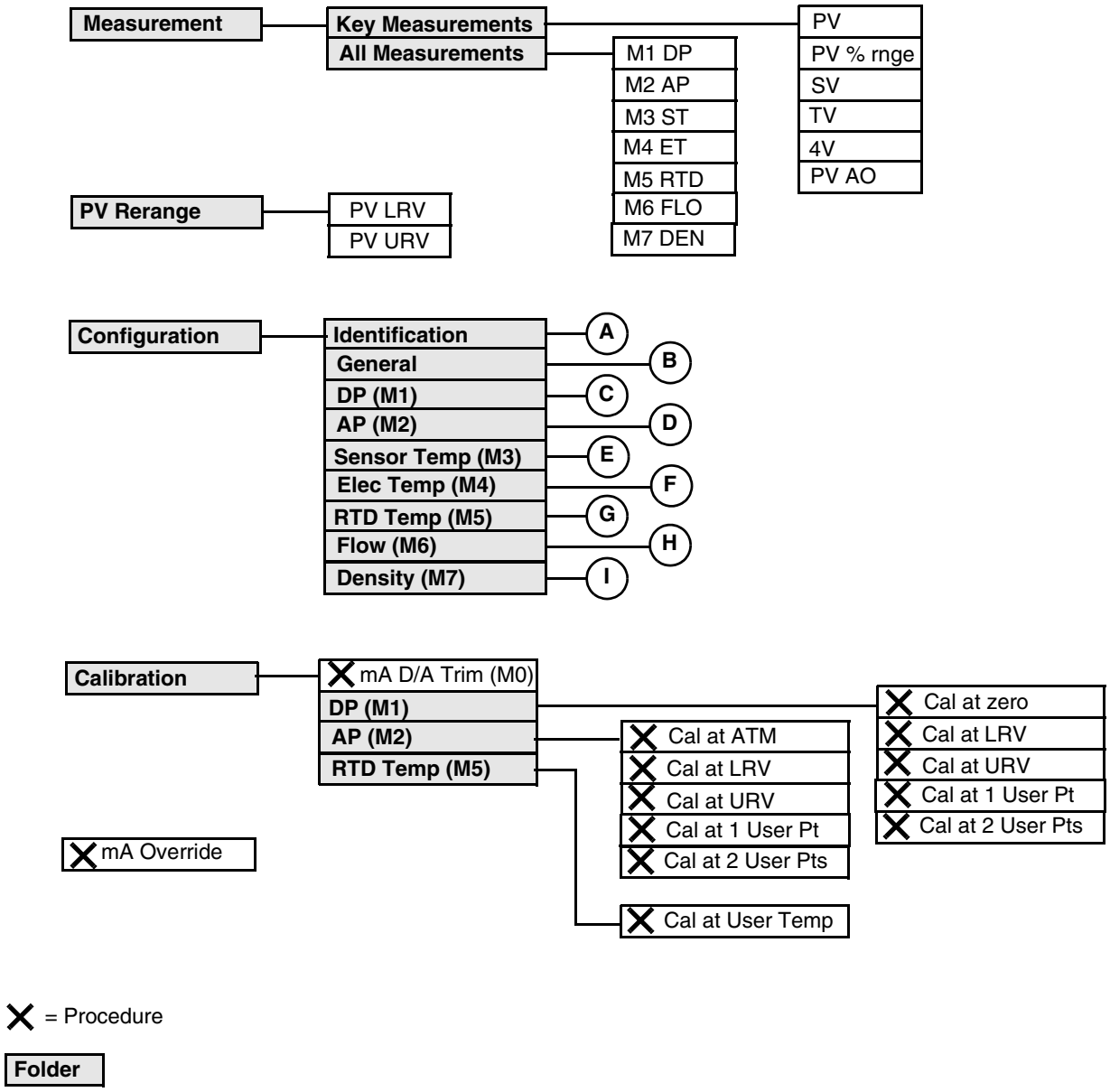

Figure 36. IMV25and IMV30 Multivariable Transmitter Online Menu Tree (1 of 3)

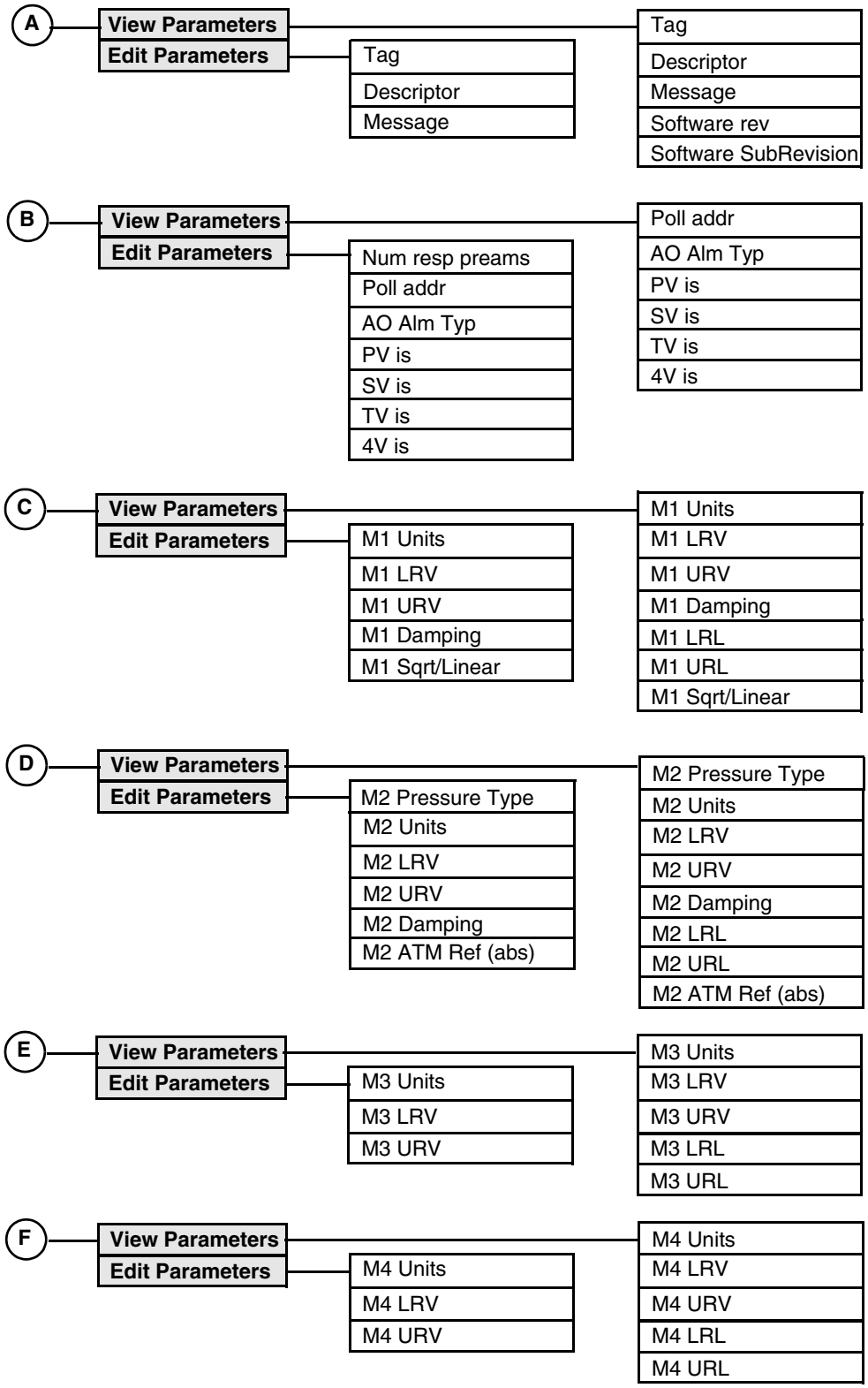

Figure 37. IMV25 and IMV30 Multivariable Transmitter Online Menu Tree (2 of 3)

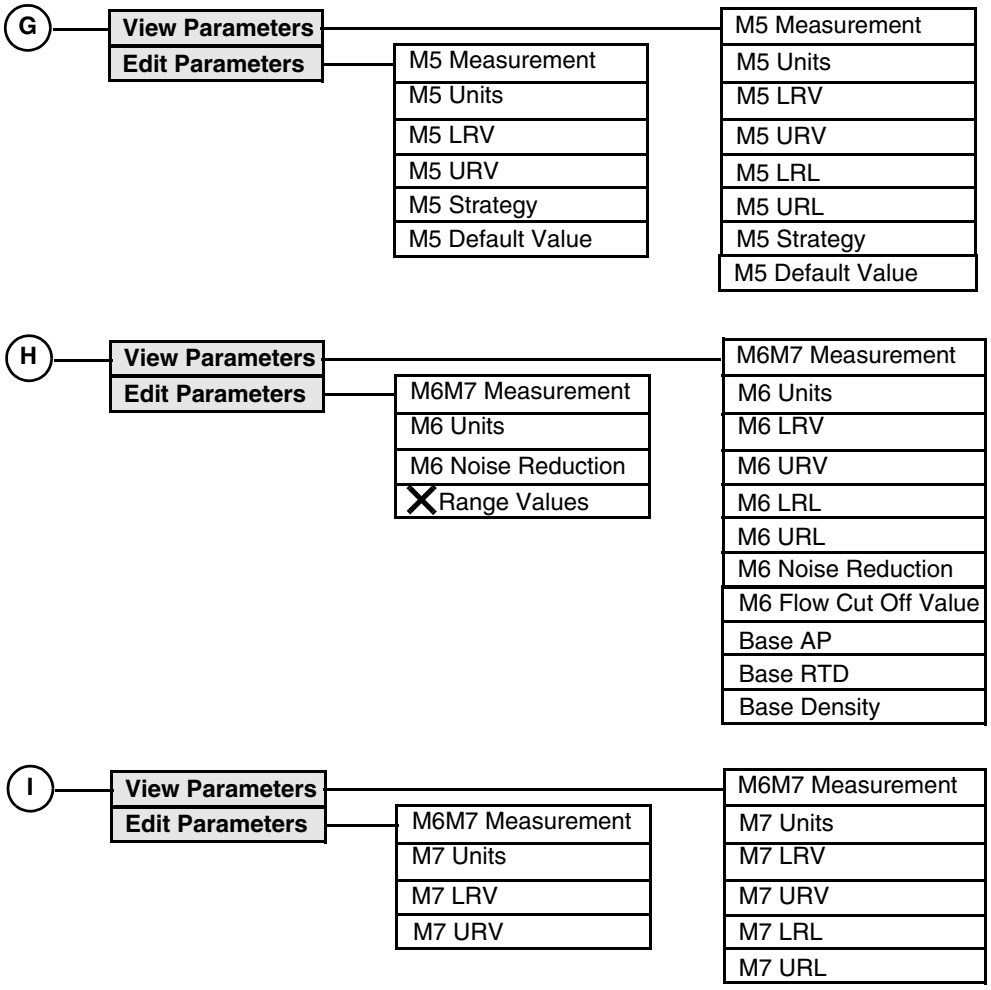

Figure 38. IMV25 and IMV30 Multivariable Transmitter Online Menu Tree (3 of 3)

IMV31 Online Menu Tree

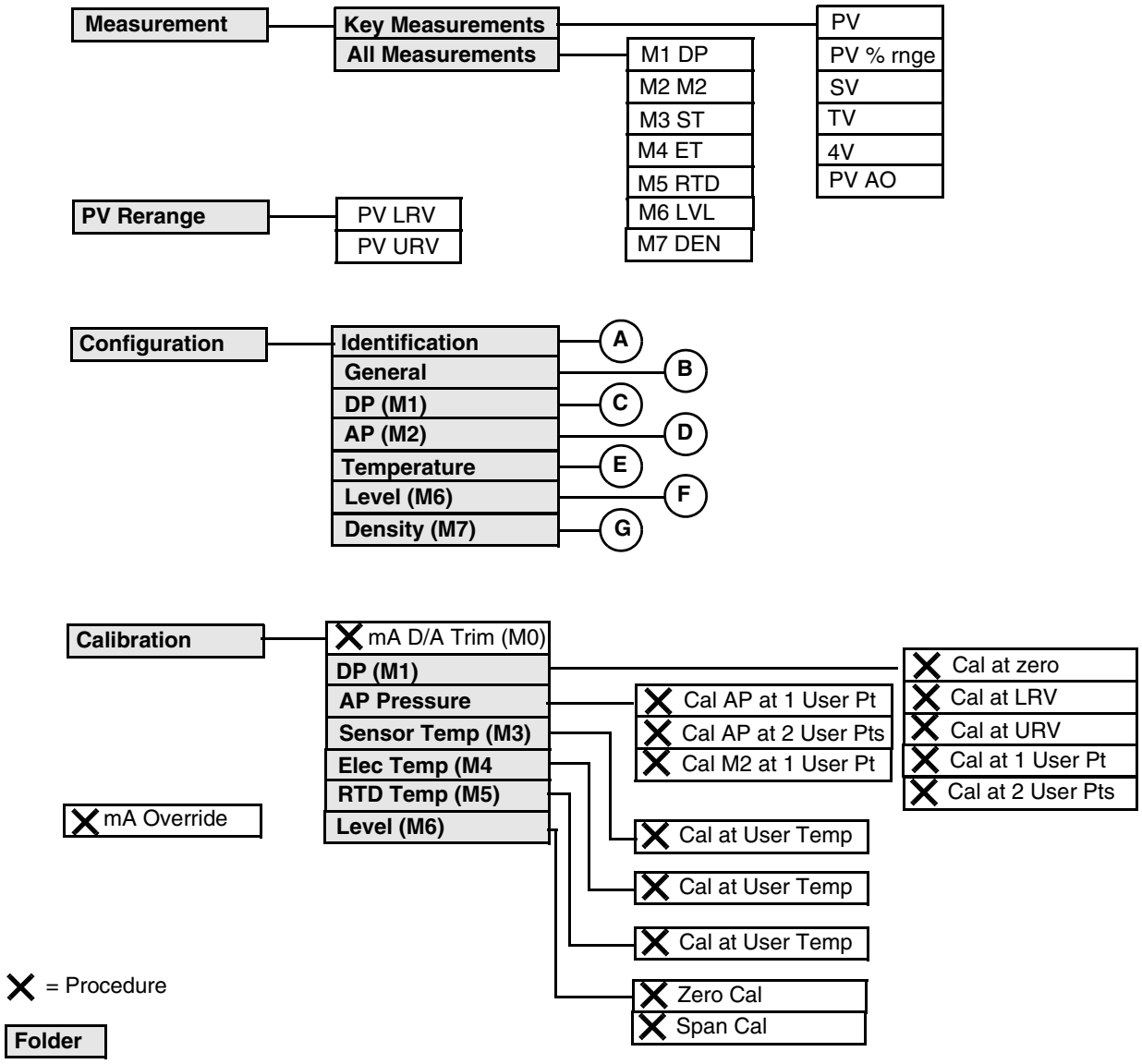

Figure 39. IMV31 Multivariable Transmitter Online Menu Tree (1 of 3)

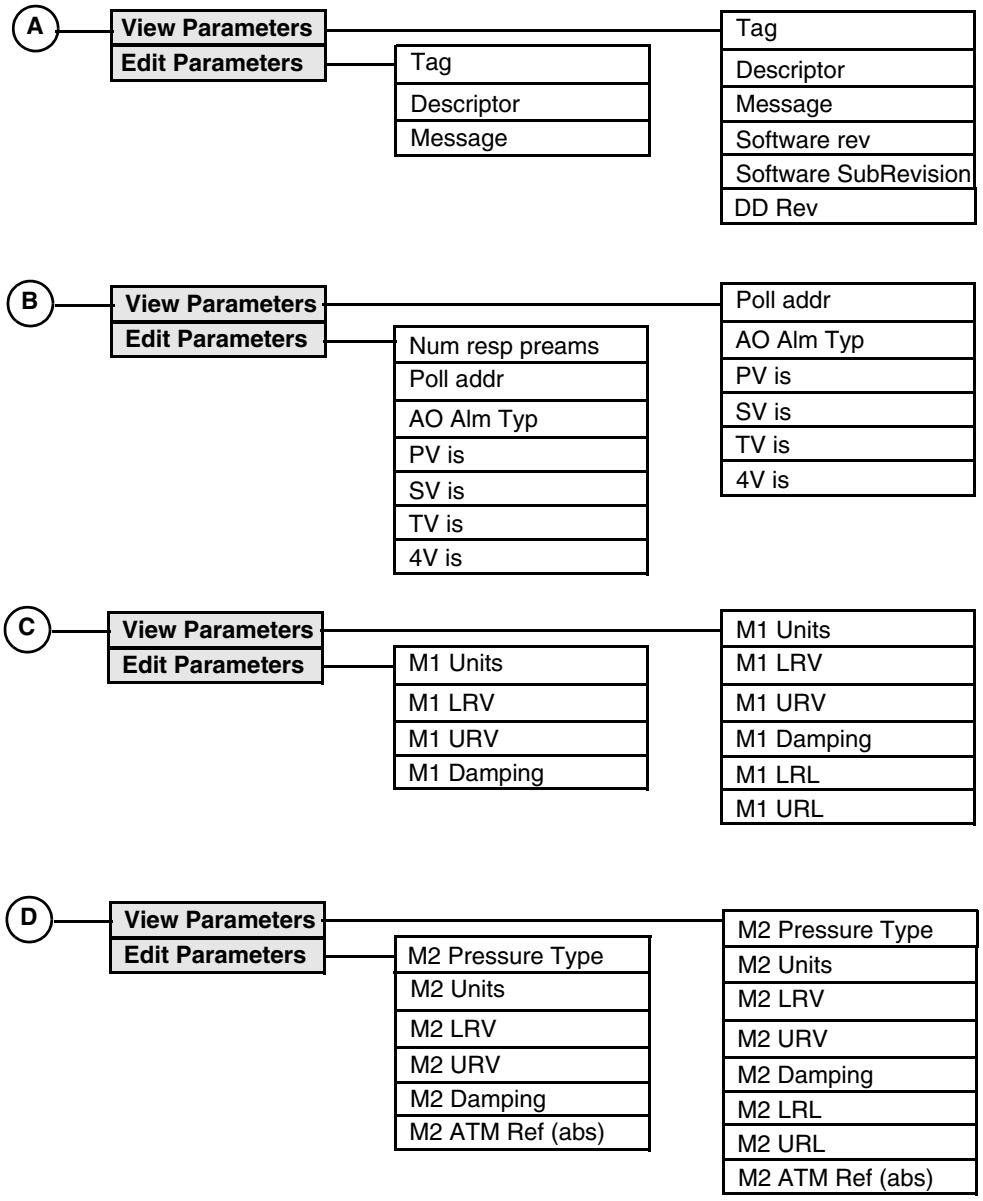

Figure 40. IMV31 Multivariable Transmitter Online Menu Tree (2 of 3)

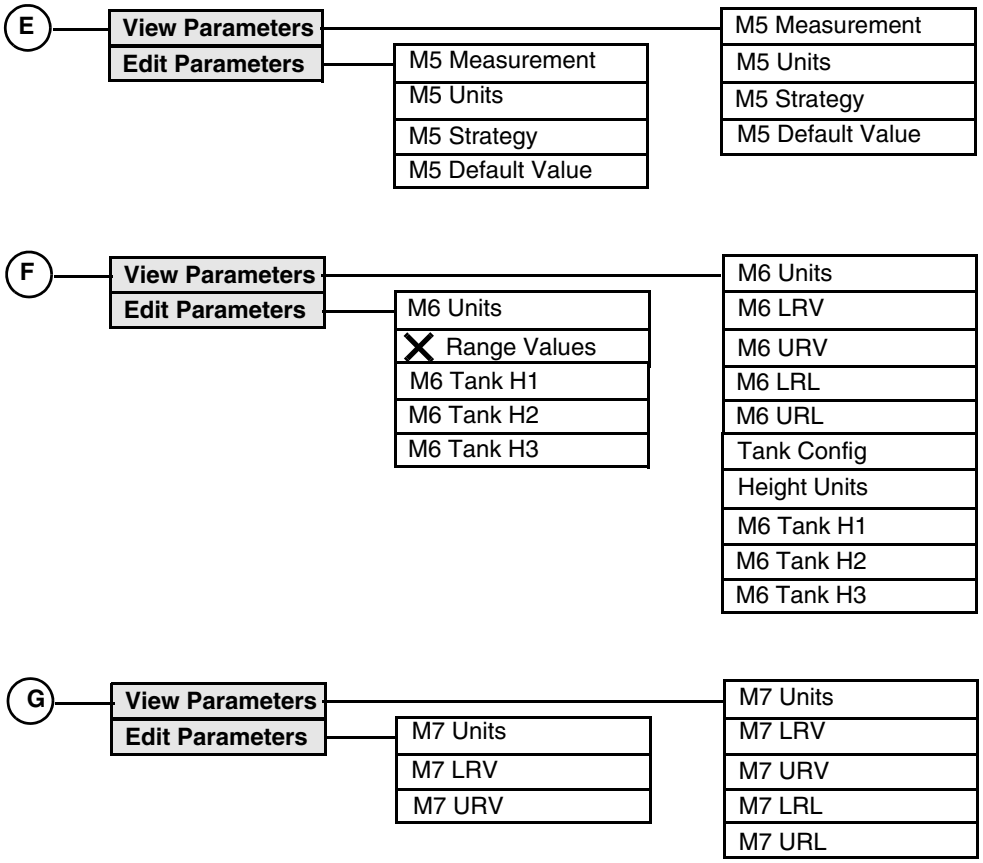

Figure 41. IMV31 Multivariable Transmitter Online Menu Tree (3 of 3)

Explanation of Parameters

Parameter	Explanation
4V	Shows the fourth variable measurement.
4V is	View/Edit the fourth variable as D/P, A/P, STEMP, ETEMP, RTD, FLOW, LEVEL, or DENS.
All Measurements	The folder containing M1 through M7 readings.
AO Alm Typ	Analog output failure direction under certain fault conditions - Hi or Lo.
AP (M2)	The folder containing absolute pressure parameters for IMV25 / IMV30.
AP Pressure	The folder containing absolute pressure parameters for IMV31.
Base AP	Shows the base absolute pressure.
Base Density	Shows the base density.
Base RTD	Shows the base RTD temperature.
Cal AP at 1 User Pt	Bench pressure calibration at 1 user determined point.
Cal AP at 2 User Pts	Bench pressure calibration at 2 user determined points.
Cal at 1 User Pt	Procedure to calibrate the transmitter at a user defined pressure.
Cal at 2 User Pts	Procedure to calibrate the transmitter at two user defined pressure points.
Cal at ATM	Procedure to calibrate the transmitter at atmospheric pressure.
Cal at LRV	Procedure to calibrate the transmitter at the lower range value.
Cal at URV	Procedure to calibrate the transmitter at the upper range value.
Cal at User Temp	Procedure to calibrate the transmitter at a user defined temperature.
Cal at zero	Procedure to calibrate the transmitter at zero.
Calibration	The folder containing calibration parameters.
Cal M2 at 1 User Pt	One point pressure calibration done at the tank.
Configuration	The folder containing configuration parameters.
Density (M7)	The folder containing density parameters.
Descriptor	View/Edit the descriptor. It is limited to 16 characters and is normally configured as the Tag Name.
DP (M1)	The folder containing differential pressure parameters.
Edit Parameters	The configuration folders containing read/write parameters.
Elec Temp (M4)	The folder containing electronics temperature parameters.
Flow (M6)	The folder containing flow parameters.
General	The folder containing general parameters.
Height Units	Shows the units of tank heights H1, H2, and H3.
Identification	The folder containing identification parameters.
Key Measurements	The folder containing PV, PV % range, SV, TV, 4V, and PV AO readings.
Level (M6)	The folder containing level parameters.
M1 Damping	View/Edit the M1 (DP) Output damping (0.0, 0.25, 0.5, 1, 2, 4, 8, 16, or 32) seconds.
M1 DP	Shows the M1 (differential pressure) measurement.
M1 LRL	Shows the M1 (DP) lower range limit.
M1 LRV	View/Edit the M1 (DP) lower range value.
M1 Sqrt/Linear	View/Edit the M1 (DP) square root/linear options
M1 Units	View/Edit the M1 (DP) engineering units.
M1 URL	Shows the M1 (DP) upper range limit.
M1 URV	View/Edit the M1 (DP) upper range value.
M2 AP	Shows the M2 (absolute pressure) measurement.
M2 ATM Ref (abs)	View/Edit ambient atmospheric pressure.

Parameter	Explanation
M2 Damping	View/Edit the M1 (DP) Output damping (0.0, 0.25, 0.5, 1, 2, 4, 8, 16, or 32) seconds.
M2 LRL	Shows the M2 (AP) lower range limit.
M2 LRV	View/Edit the M2 (AP) lower range value.
M2 Pressure Type	View/Edit the M2 Pressure type as Absolute or Gauge.
M2 Units	View/Edit the M2 (AP) engineering units.
M2 URL	Shows the M2 (AP) upper range limit.
M2 URV	View/Edit the M2 (AP) upper range value.
M3 LRL	Shows the M3 (sensor temperature) lower range limit.
M3 LRV	View/Edit the M3 (sensor temperature) lower range value.
M3 ST	Shows the M3 (sensor temperature) measurement.
M3 Units	View/Edit the M3 (sensor temperature) engineering units.
M3 URL	Shows the M3 (sensor temperature) upper range limit.
M3 URV	View/Edit the M3 (sensor temperature) upper range value.
M4 ET	Shows the M4 (electronics temperature) measurement.
M4 LRL	Shows the M4 (electronics temperature) lower range limit.
M4 LRV	View/Edit the M4 (electronics temperature) lower range value.
M4 Units	View/Edit the M4 (electronics temperature) engineering units.
M4 URL	Shows the M4 (electronics temperature) upper range limit.
M4 URV	View/Edit the M4 (electronics temperature) upper range value.
M5 Default Value	View/Edit the temperature default value.
M5 LRL	Shows the M5 (RTD) lower range limit.
M5 LRV	View/Edit the M5 (RTD) lower range value.
M5 Measurement	View/Edit the M5 Measurement as On or Off.
M5 RTD	Shows the M5 (RTD temperature) measurement.
M5 Strategy	View/Edit the M5 (RTD) strategy for flow and density.
M5 Units	View/Edit the M5 (RTD) engineering units.
M5 URL	Shows the M5 (RTD) upper range limit.
M5 URV	View/Edit the M5 (RTD) upper range value.
M6 FLO	Shows the M6 (flow) measurement.
M6 Flow Cut Off Value	Shows the M6 Flow Cut Off Value.
M6 LRL	Shows the M6 lower range limit.
M6 LRV	Shows the M6 lower range value.
M6 LVL	Shows the M6 (level) measurement.
M6 Noise Reduction	View/Edit the M6 (flow) noise reduction parameter as On or Off.
M6 Range Values	Procedure to set the M6 LRV and URV.
M6 Tank H1	View/Edit the height from pressure tap to zero level point.
M6 Tank H2	View/Edit the height from transmitter connection to pressure tap.
M6 Tank H3	View/Edit the height from transmitter connection to top pressure connection.
M6 Units	View/Edit the M6 engineering units.
M6 URL	Shows the M6 upper range limit.
M6 URV	Shows the M6 upper range value.
M6M7 Measurement	View/Edit the M6 and M7 Measurements as On or Off.
M7 DEN	Shows the M7 (density) measurement.
M7 LRL	Shows the M7 (density) lower range limit.
M7 LRV	View/Edit the M7 (density) lower range value.
M7 Units	View/Edit the M7 (density) engineering units.

Parameter	Explanation
M7 URL	Shows the M7 (density) upper range limit.
M7 URV	View/Edit the M7 (density) upper range value.
mA D/A Trim (M0)	The calibration procedure to match the 4-20 mA output to the calibration of the receiving device.
mA Override	Procedure to enter a mA value as a signal source to check other devices in the control loop.
Measurement	The folder containing measurement readings.
Message	View/Edit the message. This optional user information is limited to 32 characters and spaces.
Num resp preams	View/Edit the number of preambles to be sent in a response message from the transmitter to the Host.
Poll addr	View/Edit the transmitter poll address. It is a number from 0 through 15. Nonzero applies to multidrop applications.
PV	Shows the primary variable measurement.
PV % rnge	Shows the primary variable measurement in percent of range.
PV AO	Shows the mA output of the primary variable.
PV is	View/Edit the primary variable as D/P, A/P, STEMP, ETEMP, RTD, FLOW, LEVEL, or DENS.
PV LRV	The procedure to rerange the primary variable LRV.
PV Rerange	The folder containing procedures to rerange the primary variable LRV and URV.
PV URV	The procedure to rerange the primary variable URV.
Refresh on Connect	Specify No Refresh or Refresh Data Set.
RTD Temp (M5)	The folder containing RTD temperature parameters.
Sensor Temp (M3)	The folder containing sensor temperature parameters.
Software rev	Shows the revision level of the software or firmware that is embedded in the transmitter.
Software Sub-Revision	Shows the sub-revision level of the software or firmware that is embedded in the transmitter.
Span Cal	Span calibration procedure for Level (M6).
Static Parameter Refresh	Specify No Refresh or after one of the times provided.
SV	Shows the secondary variable measurement.
SV is	View/Edit the secondary variable as D/P, A/P, STEMP, ETEMP, RTD, FLOW, LEVEL, or DENS.
Tag	View/Edit the tag number. The tag number is the primary identifier when communicating with a transmitter using the HART Communicator or PC-Based Configurator. It is limited to eight characters. Do `not` use special characters such as >, <, -, +, :, ;, or *.
Tank Config	Shows the tank configuration type (boiler drum).
TV	Shows the tertiary variable measurement.
TV is	View/Edit the tertiary variable as D/P, A/P, STEMP, ETEMP, RTD, FLOW, LEVEL, or DENS.
View Parameters	The configuration folders containing read only parameters.
Zero Cal	Zero calibration procedure for Level (M6).

10. RTT15 Temperature Transmitters

This chapter provides information that is exclusive to using the PC50 Field Device Tool with RTT15 Temperature Transmitters with HART® communication protocol. Additional information about the transmitters and HART communication is contained in Table 9.

Table 9. Reference Documents

Document	Description
HART Communication	
MAN 4250	HART Communicator Product Manual
Transmitter Information	
MI 020-463	RTT15 - Installation, Configuration, Operation, Calibration, and Maintenance

Offline Menu Tree

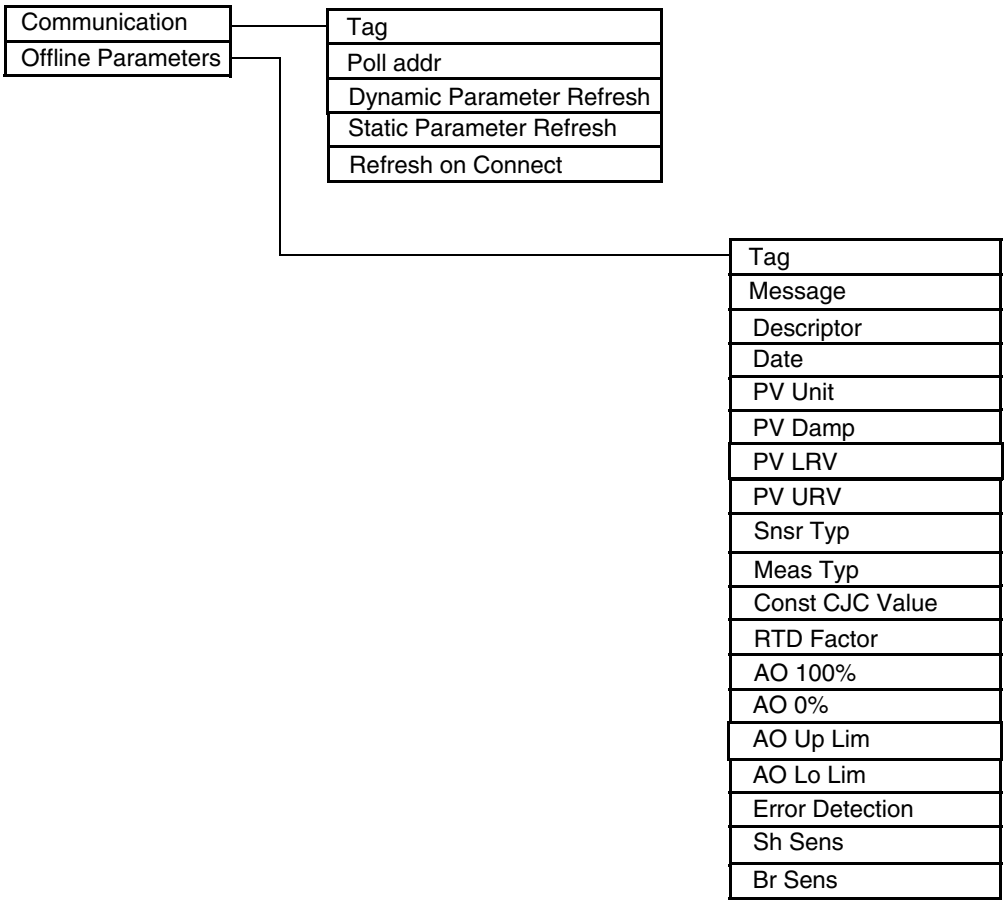

Figure 42. TI20/RTT20 Temperature Transmitter Offline Menu Tree

Online Menu Tree

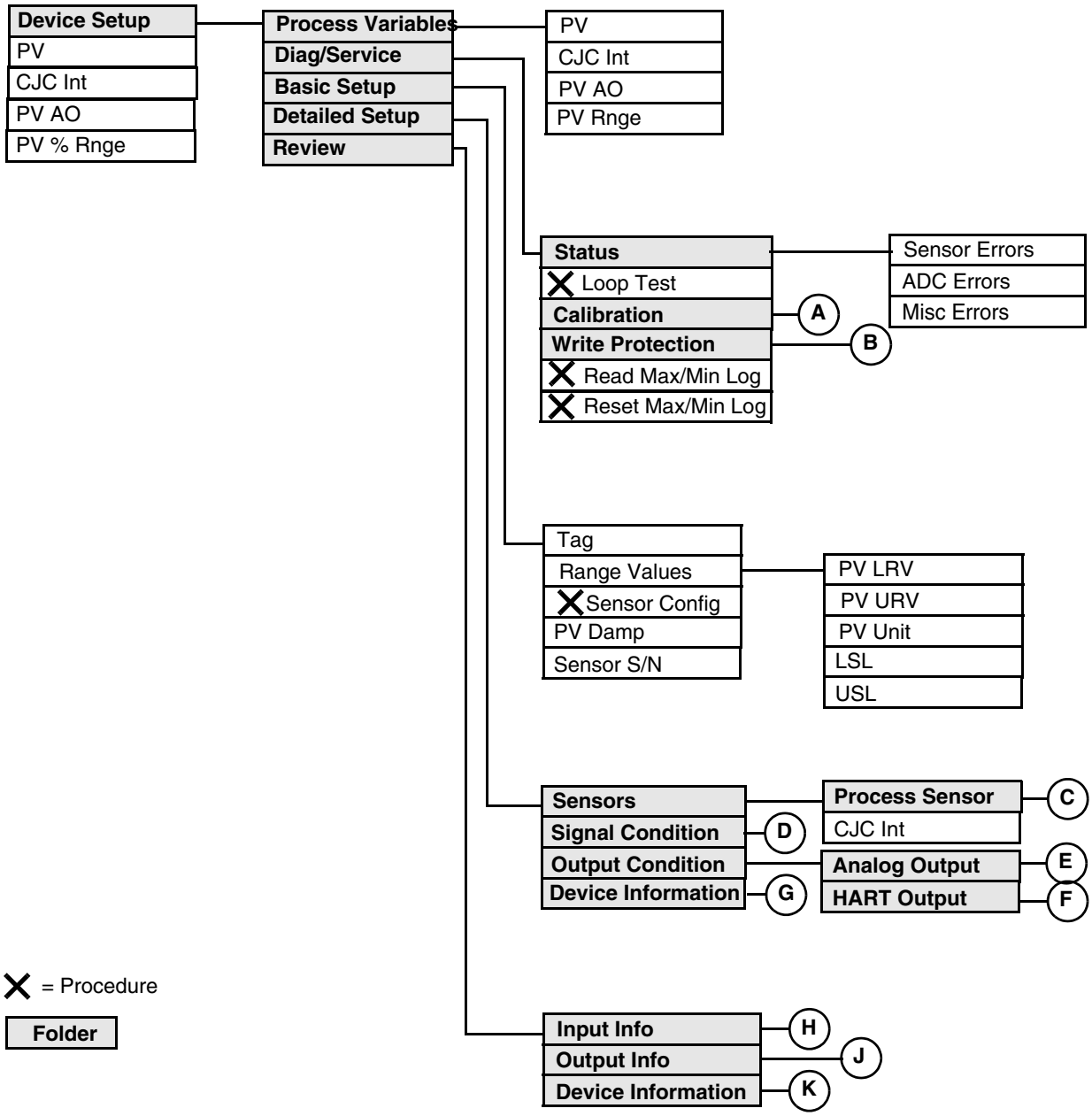

Figure 43. RTT15 Temperature Transmitter Online Menu Tree (1 of 3)

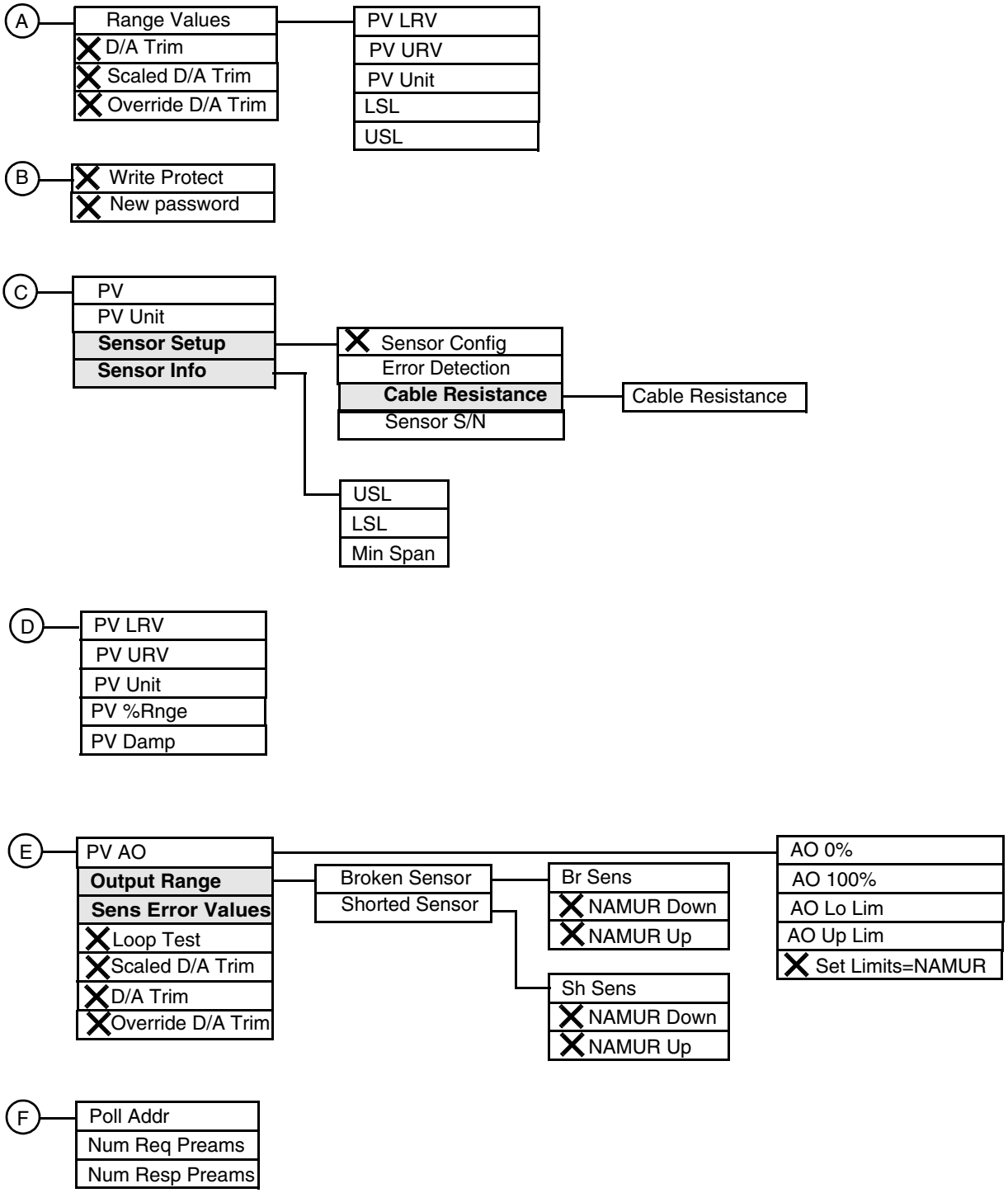

Figure 44. RTT15 Temperature Transmitter Online Menu Tree (2 of 3)

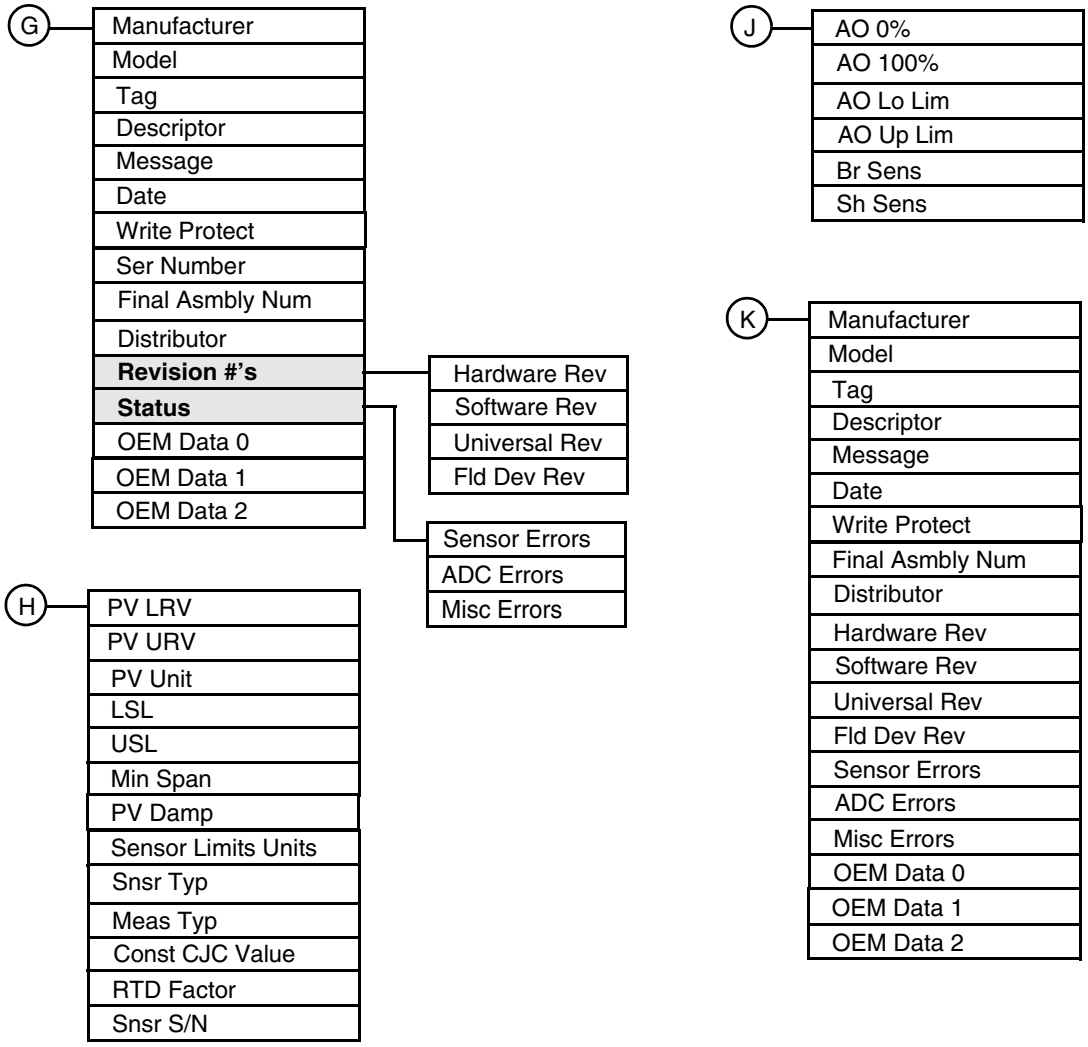

Figure 45. RTT15 Temperature Transmitter Online Menu Tree (3 of 3)

Explanation of Parameters

Parameter	Explanation
ADC Errors	Shows if there are A/D converter of input stage errors. On indicates an error; Off indicates OK.
Analog Output	The folder containing analog output parameters.
AO 0%	In Detailed Setup, enter the mA output for 0% of range. In Review, shows the mA output at 0% of range.
AO 100%	In Detailed Setup, enter the mA output for 100% of range. In Review, shows the mA output at 100% of range.
AO Lo Lim	Output if measurement goes below the PV LRV. In Detailed Setup, enter a value between 3.5 and 23 mA. (must be smaller than AO Up Lim). In Review, shows the current AO Up Lim.
AO Up Lim	Output if measurement exceeds the PV URV. In Detailed Setup, enter a value between 3.5 and 23 mA. (must be larger than AO Lo Lim). In Review, shows the current AO Up Lim.
Basic Setup	The folder containing basic setup parameters.
Br Sens	Shows the mA value in case of a broken sensor.
Broken Sensor	Path to broken sensor parameters.
Cable Resistance	Path to enter or measure the cable resistance.
Calibration	The folder containing calibration parameters.
CJC Int	Shows the internal cold junction compensation.
Const CJC Value	Shows the Const. CJC value.
D/A Trim	Procedure to trim the 4 and 20 mA output values of the transmitter to match the output of a plant standard measurement device.
Date	In Detailed Setup, enter the date (mm/dd/yyyy). In Review. shows the date of the last configuration.
Descriptor	In Detailed Setup, enter the descriptor (16 characters maximum). In Review, shows the descriptor.
Detailed Setup	The folder containing detailed setup parameters.
Device Information	In Detailed Setup, the folder containing device setup parameters. In Review, the folder containing current device information.
Device Setup	The folder leading to all parameters.
Diag/Service	The folder containing status, test, calibration, write protection, and log parameters.
Distributor	Shows the name of the distributor.
Error Detection	Select the type of errors you want monitored.
Final Asmbly Num	In Detailed Setup, enter the final assembly number. In Review, shows the final assembly number entered.
Fld Dev Rev	Shows the field device revision level.
Hardware Rev	Shows the hardware revision level.
HART Output	The folder containing HART output parameters.
Input Info	The folder containing the current input information.
Loop Test	Procedure to use the transmitter as a calibration source to check other instruments in the loop.
LSL	Shows the lower sensor limit.
Manufacturer	Shows the name of the manufacturer.
Meas Typ	Shows the measurement input type.
Message	In Detailed Setup, enter an optional message (32 characters maximum). In Review, shows any message entered.

Parameter	Explanation
Min Span	Shows the minimum span.
Misc Errors	Shows if errors other than sensor errors or ADC errors exist. On indicates an error; Off indicates OK.
Model	Shows the basic model number (RTT15).
NAMUR Down	Procedure to set broken sensor output value to 3.5 mA and enables broken sensor detection.
NAMUR Up	Procedure to set broken sensor output value to 23 mA and enables broken sensor detection.
New Password	Enter or change the write protection password.
Num Req Preams	Shows the number of preambles to be sent in a request message from the transmitter.
Num Resp Preams	Enter the number of preambles to be sent in a response message from the transmitter.
OEM Data	Not used.
Output Condition	The folder containing the analog and HART output parameters.
Output Info	The folder containing the current output information.
Output Range	The folder containing the output range parameters.
Override D/A Trim	Procedure to override any configured D/A trim and restore factory settings.
Poll Addr	Specify 0 in the standard point-to-point 2-wire analog mode. Specify an address from 1 through 15 for multidrop operation.
Process Sensor	The folder containing process sensor parameters.
Process Variables	The folder containing the process variable parameters.
PV	Shows the value of the process variable.
PV % Rnge	Shows the process variable in percent of range.
PV AO	Shows the analog output of the process variable.
PV Damp	In Setup, enter the damping value in seconds. In Review, shows the damping value
PV LRV	In Setup, enter the lower range value. In Review, shows the lower range value.
PV URV	In Setup, enter the upper range value. In Review, shows the upper range value.
PV Unit	In Setup, enter the unit of the primary variable. In Review, shows the unit of the primary variable.
Range Values	Path to configuring PV LRV, PV URV, and PV Unit.
Review	The folder containing a review of sensor, signal condition, and output condition parameters.
Read Max/Min Log	Shows the max/min log.
Reset Max/Min Log	Resets the max/min log to actual measured values.
Revision #'s	The folder containing revision level data.
RTD Factor	Shows the RTD factor (if applicable).
Scaled D/A Trim	Procedure to trim the scaled 4 and 20 mA output values of the transmitter to match the output of a plant standard measurement device.
Sens Error Values	The folder containing the sensor error parameters.
Sensor Config	Procedure to configure the sensor.
Sensor Errors	Shows if sensor errors exist. On indicates an error; Off indicates OK.
Sensor Info	The folder containing sensor information parameters.
Sensor Limits Units	Shows the sensor limit unit.
Sensor Setup	The folder containing sensor setup parameters.
Sensor S/N	Shows the sensor serial number.

Parameter	Explanation
Sensors	The folder containing the process sensor, analog output, and HART output parameters.
Ser Number	Shows the transmitter serial number.
Set Limits = NAMUR	Procedure to set the lower analog output limit to 3.8 mA and the upper analog output limit to 20.5 mA.
Sh Sens	Shows the mA value in case of a shorted sensor.
Shorted Sensor	Path to shorted sensor parameters.
Signal Condition	The folder containing the signal parameters.
Snsr S/N	Shows the sensor serial number.
Snsr Typ	Shows the sensor type.
Software Rev	Shows the software revision level.
Status	The folder containing status parameters.
Tag	The primary identifier when communicating with a transmitter. In Setup, enter the tag. In Review, shows the tag.
Universal Rev	Shows the universal command set revision level.
USL	Shows the upper sensor limit.
Write Protect	In Diag/Service, enter the write protection password (8 characters) if write protedted. In Detailed Setup, shows if the transmitter is write protected. In Review, shows if the transmitter is write protected.
Write Protection	The folder containing write protection parameters.

11. 875PH pH/ORP/ISE Analyzers

This chapter provides information that is exclusive to using the PC50 Field Device Tool with 875PH Analyzers with HART® communication protocol. Additional information about the transmitters and HART communication is contained in Table 10.

Table 10. Reference Documents

Document	Description
HART Communication	
MAN 4250	HART Communicator Product Manual
Transmitter Information	
MI 611-225	875PH Intelligent Electrochemical Analyzer for pH, ORP, or ISE Measurements

Online Menu Tree

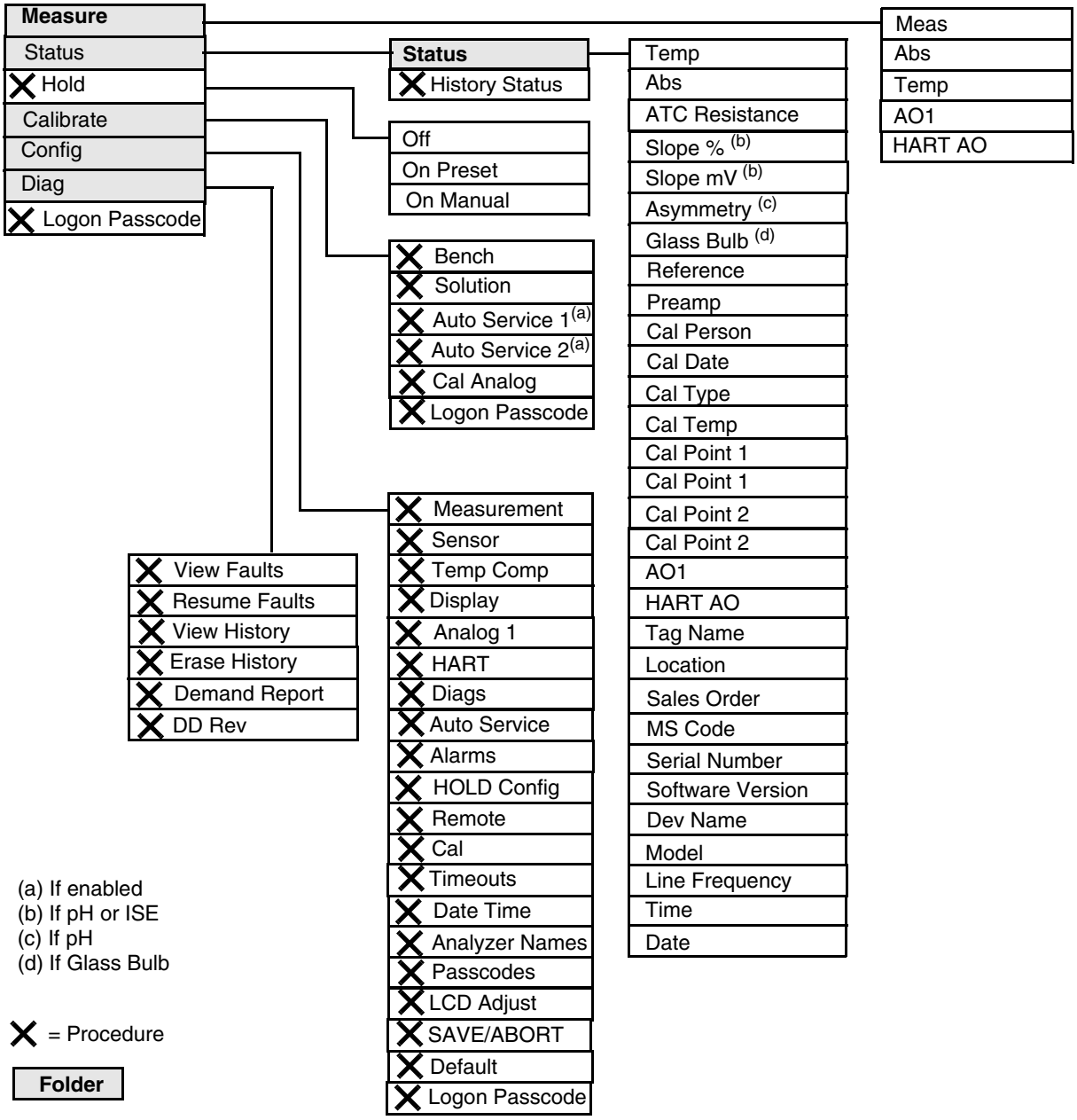

Figure 46. 875PH Analyzer Menu Tree

Explanation of Parameters

Parameter	Explanation
Measure Mode	
Abs	Displays the absolute measurement in mV
AO1	Displays the Analog Output 1 measurement in mA
HART AO	Displays the HART Analog Output measurement in mA
Meas	Displays the measurement in specified engineering units
Temp	Displays the process temperature measurement in specified engineering units
Status Mode	
Abs	Displays the absolute measurement in mV
AO1	Displays the Analog Output 1 measurement in mA
Asymmetry	Displays the asymmetry potential (mV difference between the theoretical isopotential point and the actual point due to the most recent calibration
ATC Resistance	Displays the resistance of the temperature compensator
Cal Date	Displays the date of the last calibration in the form mm/dd/yy
Cal Person	Displays the name of the last calibrator
Cal Point One	Displays the values at calibration point one in pH and then in mV
Cal Point Two	Displays the values at calibration point two in pH and then in mV
Cal Temp	Displays the temperature calibration type of last calibration (default, custom, solution, failsafe, manual)
Cal Type	Displays the type of the last calibration (bench, solution, factory default)
Date	Displays the current date
Dev Name	Displays the device name of the analyzer
Glass Bulb	Displays the glass bulb resistance
HART AO	Displays the HART Analog Output measurement in mA
Line Frequency	Displays the ac line frequency of the analyzer
Location	Displays the location of the measurement
Model	Displays the model number of the analyzer
MS Code	Displays the analyzer model code
Pre-amp	Displays the preamplifier power in mW
Reference	Displays the reference junction resistance
Sales Order	Displays the analyzer sales order number
Serial Number	Displays the analyzer serial number
Slope %	Displays the deviation in percent of the slope of the most recent calibration compared to the standard
Slope mV	Displays the change in the mV/pH or mV/decade of the most recent calibration
Software Version	Displays the software version of the analyzer
Tag Name	Displays the tag name of the analyzer
Temp	Displays the process temperature measurement in specified engineering units
Time	Displays the current time
Hold Mode	
Off	Used to release the analyzer from Hold mode
On Manual	Used to hold all values and states at desired levels
On Present	Used to hold all values and states at their current level

Parameter	Explanation
Calibrate Mode	
Auto Service n	Used to perform an automatic cleaning of the sensor and/or a 1-point or 2-point calibration as configured
Bench	Used to verify the calibration using theoretical millivolt inputs or to return to the stored factory default calibration
Cal Analog	Used to tune the 4 mA and 20 mA values of the AO1 or HART analog outputs
Logon Passcode	Used to enter the passcode to perform functions requiring a passcode
Solution	Used to perform a solution calibration
Configure Mode	
Alarms	Used to specify each alarm to represent measurement, temperature, absolute, or a fault and then subparameters associated with each
Analog 1	Used to specify the Analog 1 output to represent measurement, temperature, or absolute; minimum (LRV) and maximum (URV) range values; and failsafe output
Analyzer Names	Used to specify the tag number, tag name, location, and device name
Auto Service	Used to configure auto service related parameters
Cal	Used to specify the buffer to be used with a Smart solution calibration
Date Time	Used to set the date and time for the real time clock
Default	Used to reset the configuration back to the factory default values
Diags	Used to specify what fault messages can appear on your display
Display	Used to configure the display as single, dual, or scan and then subparameters associated with each
HART	Used to specify the HART output to represent measurement, temperature, or absolute; minimum (LRV) and maximum (URV) range values; and failsafe output. Also used to specify the Polling Address and the Preambles value.
HOLD Config	Used to configure all values and states to be held at their current level (On Present) or at a desired level (On Manual) when triggered by a digital signal or when going into Calibration or Configuration mode
LCD Adjust	Used to adjust the brightness of the front panel display
Logon Passcode	Used to enter the passcode to perform functions requiring a passcode
Measurement	Used to configure units, damping, and other measurement parameters
Passcodes	Used to establish or change the Level 1, 2, and 3 passcodes
Remote	Used to configure parameters associated with a remote personal computer program
SAVE/ABORT	Used to save or abort your changes
Sensor	Used to configure sensor related parameters
Temp Comp	Used to configure the temperature compensation as standard, ammonia, or custom
Timeouts	Used to specify the time for front panel, remote, and digital communication timeouts
Diagnostics Mode	
DD Rev	Displays the DD revision level
Demand Report	Used to send the history log out to a remote port
Erase History	Used to erase the history log (requires a Level 1 passcode)
Resume Faults	Used to resume any suspended faults
View Faults	Used to view any faults and possibly suspend each fault
View History	Used to view the diagnostic history

12. 875EC Electrodeless Conductivity Analyzers

This chapter provides information that is exclusive to using the PC50 Field Device Tool with 875EC Analyzers with HART® communication protocol. Additional information about the transmitters and HART communication is contained in Table 11.

Table 11. Reference Documents

Document	Description
HART Communication	
MAN 4250	HART Communicator Product Manual
Transmitter Information	
MI 611-224	875EC Intelligent Electrochemical Analyzer for Electrodeless Conductivity Measurements

Online Menu Tree

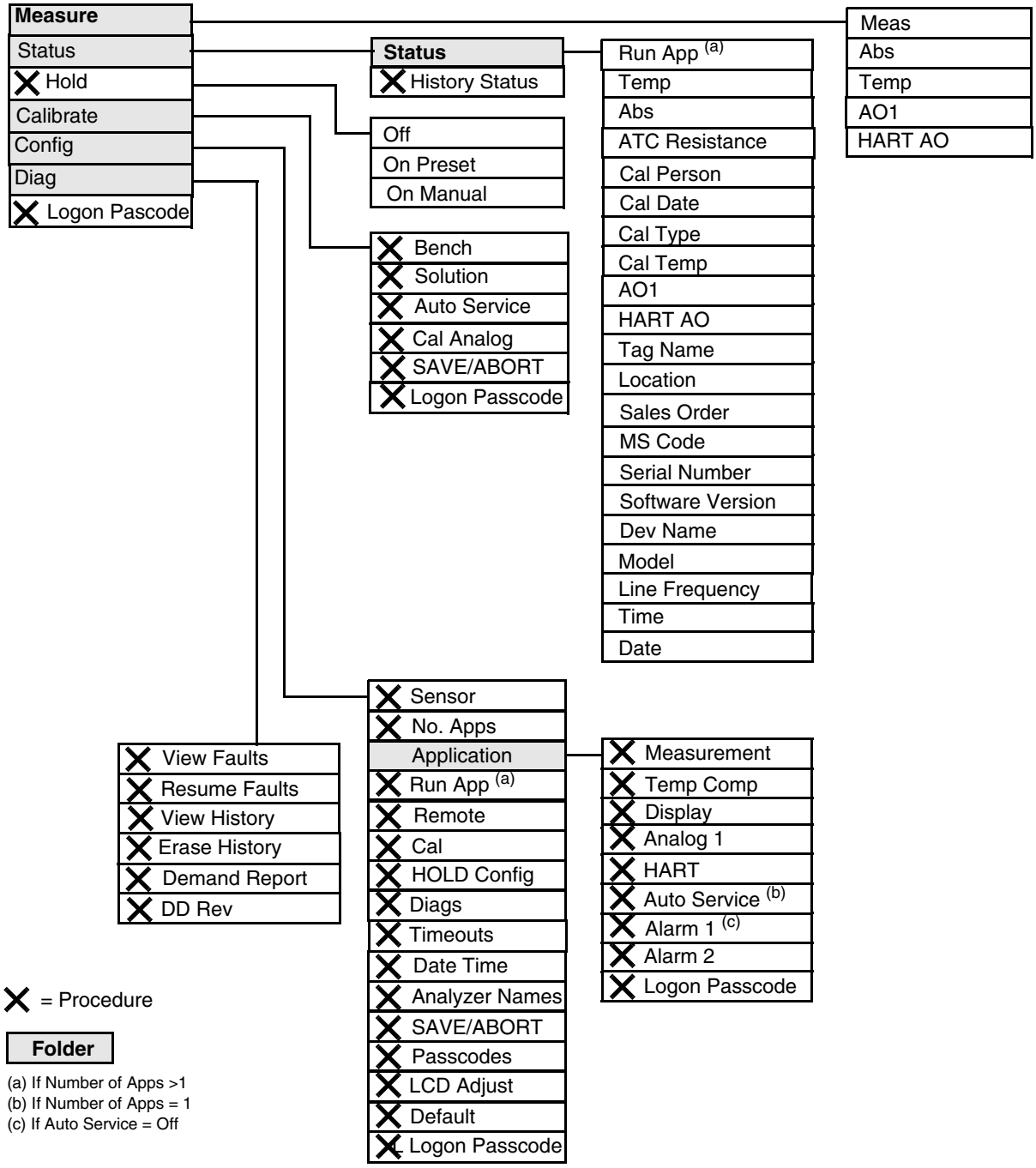

Figure 47. 875EC Analyzer Menu Tree

Explanation of Parameters

Parameter	Explanation
Measure Mode	
Abs	Displays the absolute (uncompensated) measurement
AO1	Displays the Analog Output 1 (PV) measurement in mA or volts
HART AO	Displays the HART Analog Output (SV) measurement in mA
Meas	Displays the measurement in specified engineering units
Temp	Displays the process temperature measurement in specified engineering units
Status Mode	
Abs	Displays the absolute (uncompensated) measurement
AO1	Displays the Analog Output 1 (PV) measurement in mA or volts
ATC Resistance	Displays the resistance of the temperature compensator
Cal Date	Displays the date of the last calibration
Cal Person	Displays the name of the last calibrator
Cal Temp	Displays the temperature calibration type of last calibration
Cal Type	Displays the type of the last calibration
Date	Displays the current date
Dev Name	Displays the device name of the analyzer
HART AO	Displays the HART Analog Output (SV) measurement in mA
Line Frequency	Displays the ac line frequency of the analyzer
Location	Displays the location of the measurement
Model	Displays the model number of the analyzer
MS Code	Displays the analyzer model code
Run App	Displays the current application
Sales Order	Displays the analyzer sales order number
Serial Number	Displays the analyzer serial number
Software Version	Displays the software version of the analyzer
Tag Name	Displays the tag name of the analyzer
Temp	Displays the process temperature measurement in specified engineering units
Time	Displays the current time
Hold Mode	
Off	Used to release the analyzer from Hold mode
On Manual	Used to hold all values and states at desired levels
On Present	Used to hold all values and states at their current level
Calibrate Mode	
Auto Service	Used to perform a calibration as configured
Bench	Used to verify the calibration using theoretical millivolt inputs or to return to the stored factory default calibration
Cal Analog	Used to tune the 4 mA and 20 mA values of the AO1 or HART analog outputs
Logon Passcode	Used to enter the passcode to perform functions requiring a passcode
SAVE/ABORT	Used to save or abort your changes
Solution	Used to perform a solution calibration
Configure Mode	
Alarm #	Used to specify each alarm to represent measurement, temperature, absolute, or a fault and then subparameters associated with each
Analog 1	Used to specify the Analog 1 output (PV) to represent measurement, temperature, or absolute; minimum (LRV) and maximum (URV) range values; and failsafe output

Parameter	Explanation
Analyzer Names	Used to specify the tag number, tag name, location, and device name
Application	The folder containing the measurement, temperature compensation, display, output, auto service, and alarm configuration for each application
Auto Service	Used to configure auto service related parameters
Cal	Used to specify the options to be used with a solution calibration
Date Time	Used to set the date and time for the real time clock
Default	Used to reset the configuration back to the factory default values
Diags	Used to specify what fault messages can appear on your display
Display	Used to configure the display as single, dual, or scan and then subparameters associated with each
HART	Used to specify the HART outputs to represent measurement, temperature, or absolute; minimum (LRV) and maximum (URV) range values; and failsafe output. Also used to specify the Polling Address and the Preambles value.
HOLD Config	Used to configure all values and states to be held at their current level (On Present) or at a desired level (On Manual) when triggered by a digital signal or when going into Calibration or Configuration mode
LCD Adjust	Used to adjust the brightness of the front panel display
Logon Passcode	Used to enter the passcode to perform functions requiring a passcode
Measurement	Used to configure units, damping, and other measurement parameters
No. Apps	Used to specify the number of applications you wish to preconfigure
Passcodes	Used to establish or change the Level 1, 2, and 3 passcodes
Remote	Used to configure parameters associated with a remote personal computer or RS232 printer
Run App	Used to switch from one application to another
SAVE/ABORT	Used to save or abort your changes
Sensor	Used to configure sensor related parameters
Temp Comp	Used to configure the temperature compensation for the chemical being measured
Timeouts	Used to specify the time for front panel, remote, and digital communication timeouts
Diagnostics Mode	
DD Rev	Displays the DD revision level
Demand Report	Used to send the history log out to the remote RS232 port
Erase History	Used to erase the history log (requires a Level 1 passcode)
Resume Faults	Used to resume any suspended faults
View Faults	Used to view any faults and possibly suspend each fault
View History	Used to view the diagnostic history

13. 875CR Conductivity/Resistivity Analyzers

This chapter provides information that is exclusive to using the PC50 Field Device Tool with 875CR Analyzers with HART® communication protocol. Additional information about the transmitters and HART communication is contained in Table 12.

Table 12. Reference Documents

Document	Description
HART Communication	
MAN 4250	HART Communicator Product Manual
Transmitter Information	
MI 611-222	875CR Intelligent Electrochemical Analyzer for Contacting Conductivity and Resistivity Measurements

Online Menu Tree

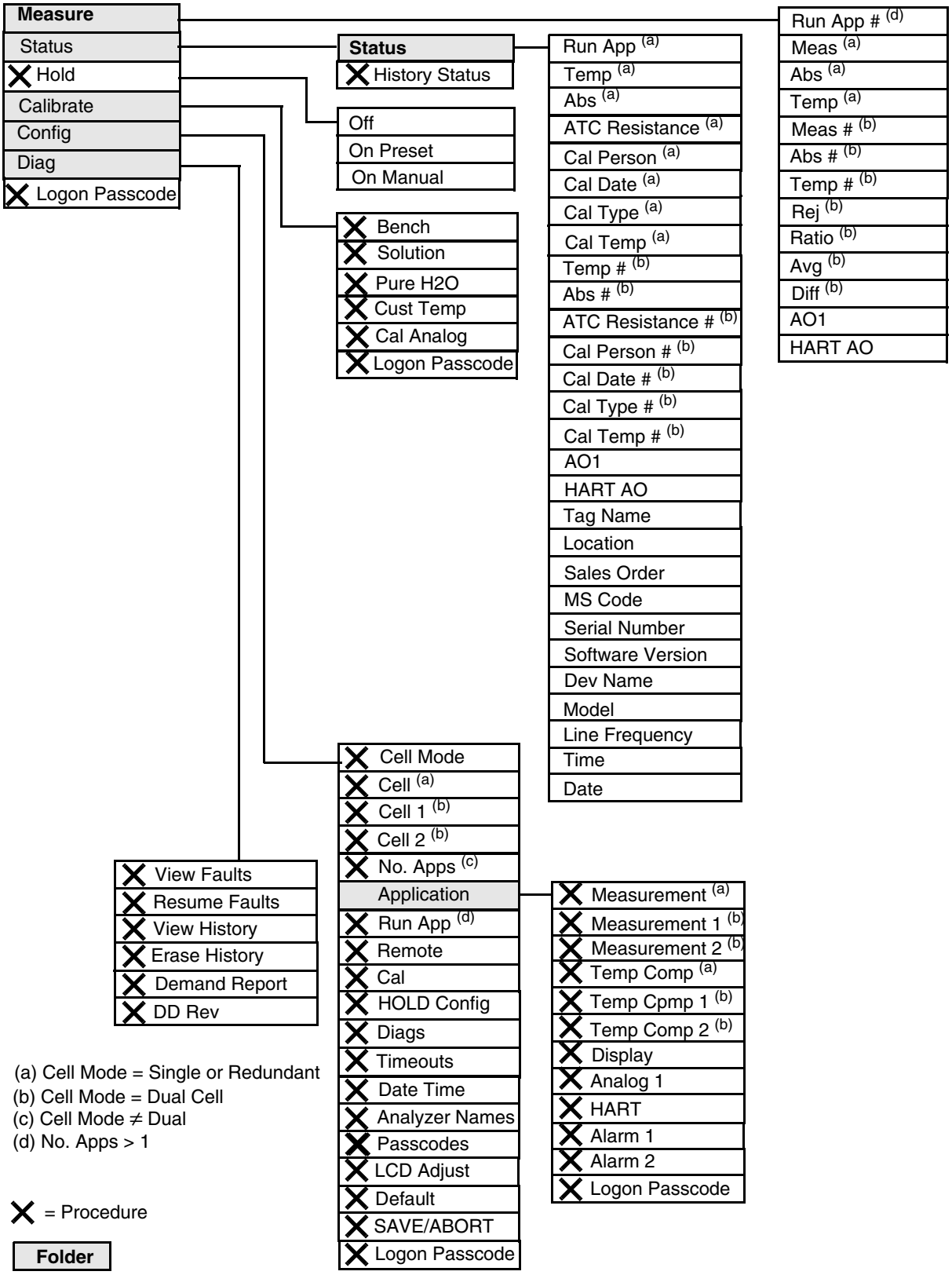

Figure 48. 875CR Analyzer Menu Tree

Explanation of Parameters

Parameter	Explanation
Measure Mode	
Abs or Abs #	Displays the absolute (uncompensated) measurement
AO1	Displays the Analog Output 1 (PV) measurement in mA or volts
Avg	Displays the average measurement of (cell 1 + cell 2) / 2
Diff	Displays the measurement difference For conductivity, cell 1 - cell 2 For resistivity, cell 2 - cell 1
HART AO	Displays the HART Analog Output measurement in mA
Meas or Meas #	Displays the measurement in specified engineering units
Ratio	Displays the measurement ratio For conductivity, (cell 2 / cell 1) x 100 For resistivity, (cell 1 / cell 2) x 100
Rej	Displays the percent rejection For conductivity, [1- (cell 2 / cell 1)] x 100 For resistivity, [1- (cell 1 / cell 2)] x 100
Run App	Displays the current application
Temp or Temp #	Displays the process temperature measurement in specified engineering units
Status Mode	
Abs or Abs #	Displays the absolute (uncompensated) measurement
AO1	Displays the Analog Output 1 (PV) measurement in mA or volts
ATC Resistance or ATC Resistance #	Displays the resistance of the temperature compensator
Cal Date or Cal Date #	Displays the date of the last calibration in the form mm/dd/yy
Cal Person or Cal Person #	Displays the name of the last calibrator
Cal Temp or Cal Temp #	Displays the temperature calibration type of last calibration
Cal Type or Cal Type #	Displays the type of the last calibration
Date	Displays the current date
Dev Name	Displays the device name of the analyzer
HART AO	Displays the HART Analog Output measurement in mA
Line Frequency	Displays the ac line frequency of the analyzer
Location	Displays the location of the measurement
Model	Displays the model number of the analyzer
MS Code	Displays the analyzer model code
Run App	Displays the current application
Sales Order	Displays the analyzer sales order number
Serial Number	Displays the analyzer serial number
Software Version	Displays the software version of the analyzer
Tag Name	Displays the tag name of the analyzer
Temp or Temp #	Displays the process temperature measurement in specified engineering units
Time	Displays the current time
Hold Mode	
Off	Used to release the analyzer from Hold mode
On Manual	Used to hold all values and states at desired levels
On Present	Used to hold all values and states at their current level

Parameter	Explanation
Calibrate Mode	
Bench	Used to verify the calibration using theoretical millivolt inputs or to return to the stored factory default calibration
Cal Analog	Used to tune the 4 mA and 20 mA values of the AO1 or HART analog outputs
Logon Passcode	Used to enter the passcode to perform functions requiring a passcode
Pure H2O	Used to perform a pure water calibration
Solution	Used to perform a solution calibration
Configure Mode	
Alarm #	Used to specify each alarm to represent measurement, temperature, absolute, or a fault and then subparameters associated with each
Analog 1	Used to specify the Analog 1 output (PV) to represent measurement, temperature, or absolute; minimum (LRV) and maximum (URV) range values; and failsafe output
Analyzer Names	Used to specify the tag number, tag name, location, and device name
Application	The folder containing the measurement, temperature compensation, display, output, and alarm configuration for each application
Cal	Used to specify the options to be used with a solution calibration
Cell or Cell #	Used to specify the cell constant and temperature features for all three applications
Cell Mode	Used to specify the cell mode as Single, Dual, or Redundant
Date Time	Used to set the date and time for the real time clock
Default	Used to reset the configuration back to the factory default values
Diags	Used to specify what fault messages can appear on your display
Display	Used to configure the display as single, dual, or scan and then subparameters associated with each
HART	Used to specify the HART output to represent measurement, temperature, or absolute; minimum (LRV) and maximum (URV) range values; and failsafe output. Also used to specify the Polling Address and the Preambles value.
HOLD Config	Used to configure all values and states to be held at their current level (On Present) or at a desired level (On Manual) when triggered by a digital signal or when going into Calibration or Configuration mode
LCD Adjust	Used to adjust the brightness of the front panel display
Logon Passcode	Used to enter the passcode to perform functions requiring a passcode
Measurement or Measurement #	Used to configure units, damping, and other measurement parameters
No. Apps	Used to specify the number of applications you wish to configure
Passcodes	Used to establish or change the Level 1, 2, and 3 passcodes
Remote	Used to configure parameters associated with a remote personal computer or RS232 printer
Run App	Used to switch from one application to another
SAVE/ABORT	Used to save or abort your changes
Temp Comp or Temp Comp #	Used to configure the temperature compensation for the chemical being measured
Timeouts	Used to specify the time for front panel, remote, and digital communication timeouts
Diagnostics Mode	
DD Rev	Displays the DD revision level
Demand Report	Used to send the history log out to a remote RS232 port
Erase History	Used to erase the history log (requires a Level 1 passcode)
Resume Faults	Used to resume any suspended faults
View Faults	Used to view any faults and possibly suspend each fault
View History	Used to view the diagnostic history

ISSUE DATES

OCT 2003 FEB 2016
SEP 2005
SEP 2006
FEB 2008

Vertical lines to the right of text or illustrations indicate areas changed at last issue date.

Invensys Systems, Inc.
38 Neponset Avenue
Foxboro, MA 02035
United States of America
http://www.fielddevices.foxboro.com

Global Customer Support
Inside U.S.: 1-866-746-6477
Outside U.S.: 1-508-549-2424
Website: http://support.ips.invensys.com

0216